COPYRIGHT OF ATELIER MB LTD
DO NOT SCALE FROM THIS DRAWING
DIMENSIONS TO BE CHECKED ON SITE

Note: These elevations are indicative and not based on a full measured survey

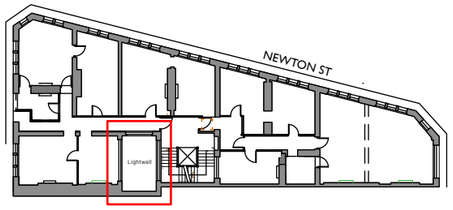

1 Key Plan
Scale: 1:500

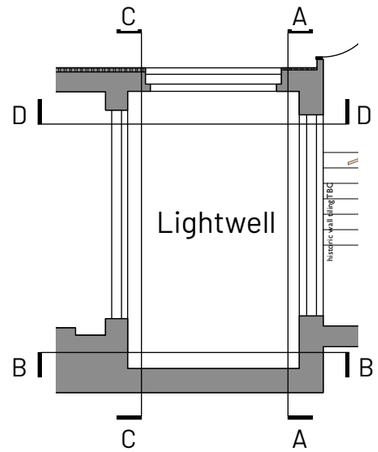

Key

- Existing
- Proposed
- Existing Historic Fabric to be Removed
- Existing Non-Historic Fabric to be Removed

Note: Floor Levels are Approximate

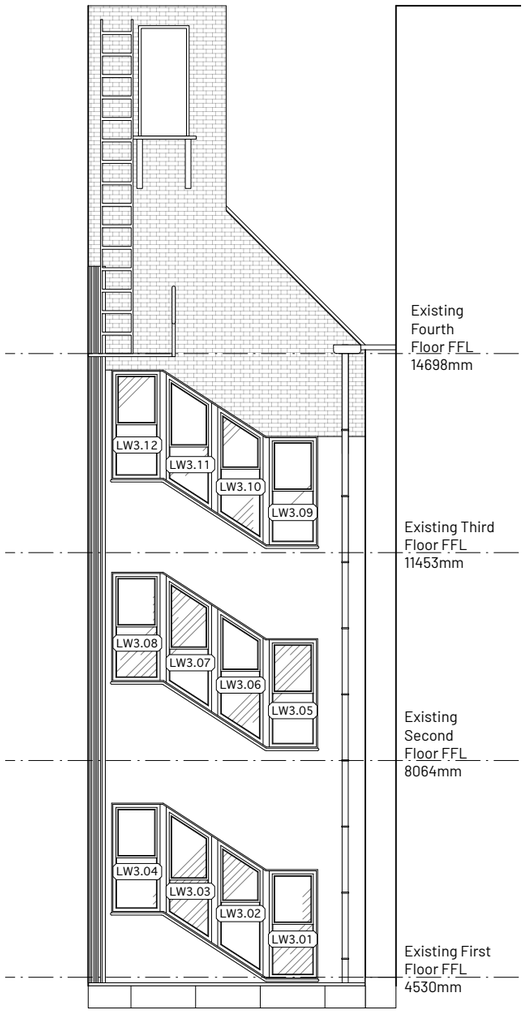

2 Lightwell Elevation AA
Scale: 1:100

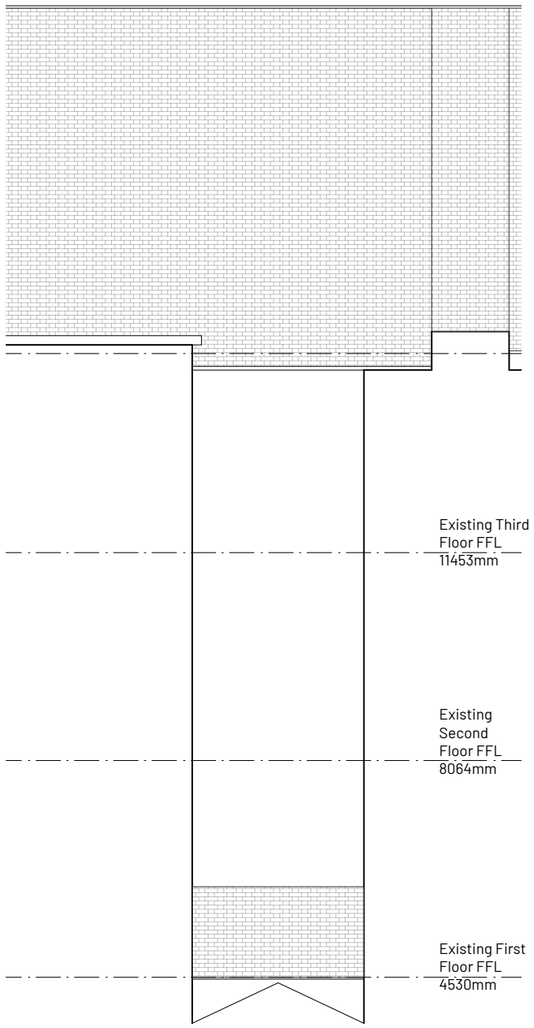

3 Lightwell Elevation BB
Scale: 1:100

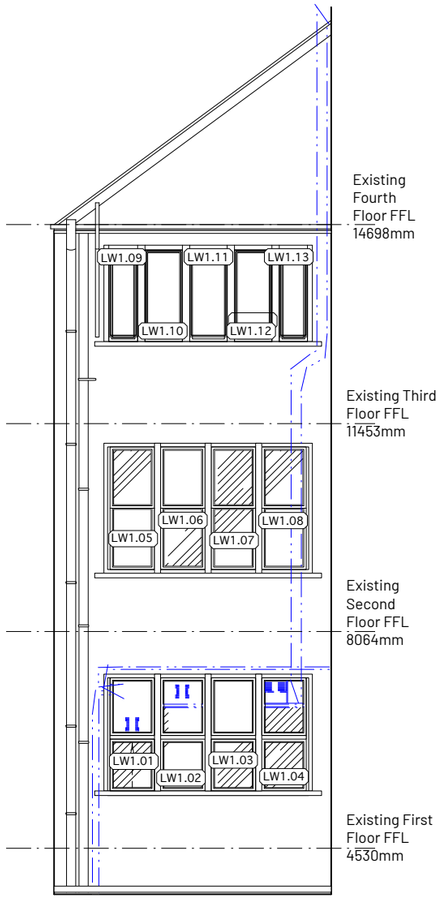

4 Lightwell Elevation CC
Scale: 1:100

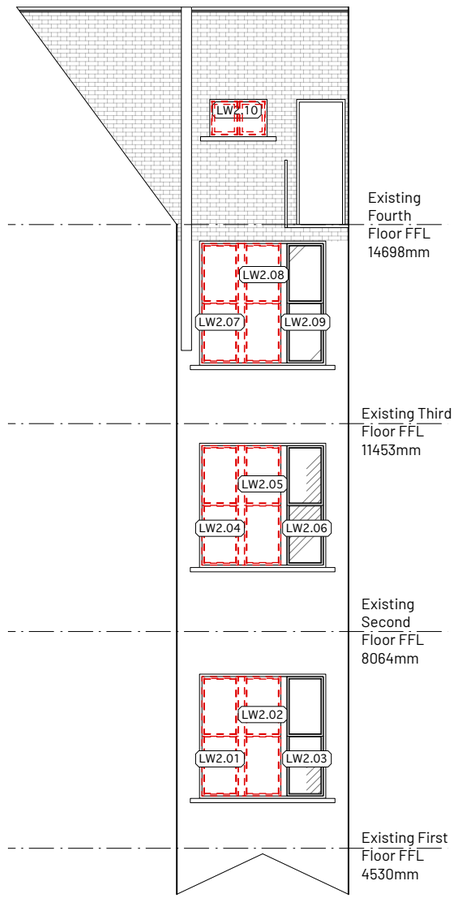

5 Lightwell Elevation DD
Scale: 1:100

REV	NOTE	DRN	CHK

St Margarets (App. 2), Manchester
For Charlotte Street Estates

Lightwell Elevations - Strip-Out

PROJECT REF.	2093
DRWG NO.	P(231)
REVISION	
SCALE	1:100 @ A3
DATE 1st	Aug 25
DRAWN	GS

SK sketch E existing P proposed T tender C construction FI final issue

+44 161 236 0051
ARCHITECT@ATELIERMB.CO.UK
ATELIER.MB