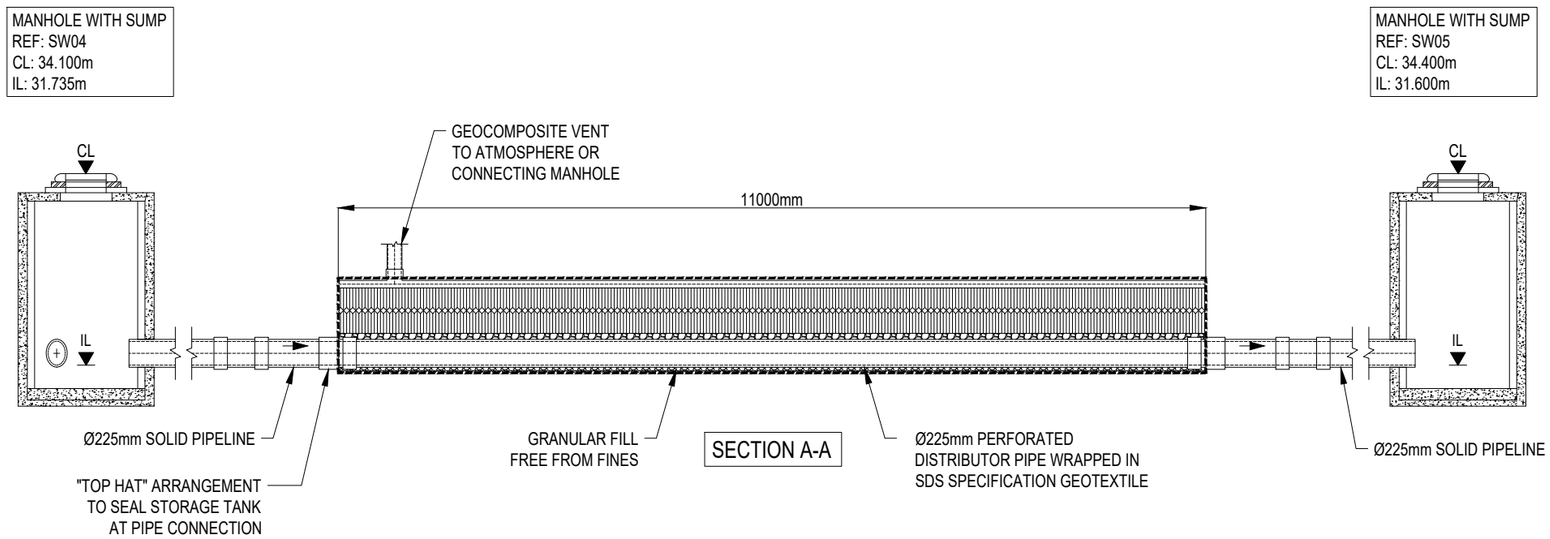

SECTION A-A

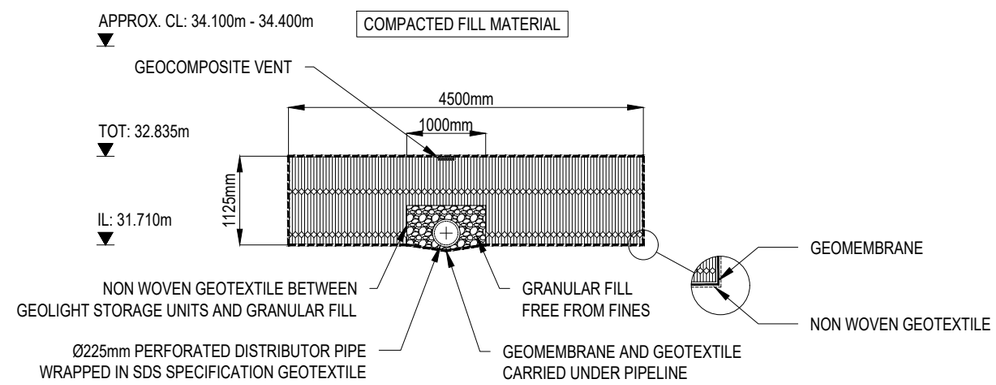

SECTION B-B

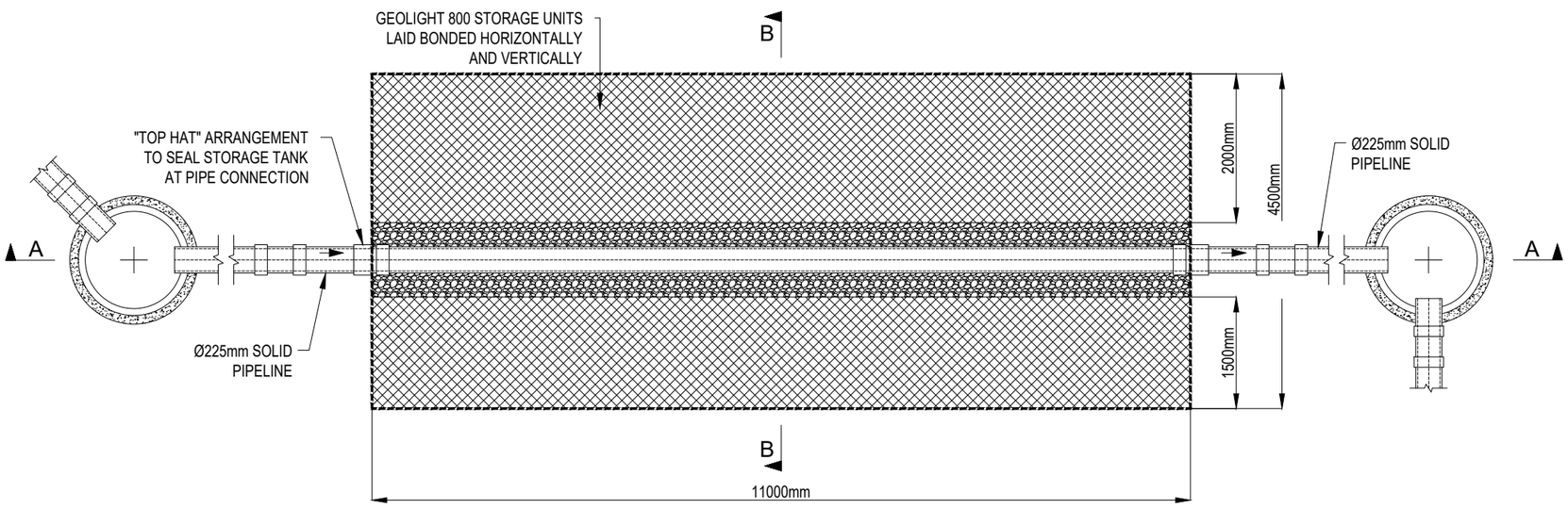

REFERENCE DRAWINGS:			
Drawing Number	**Revision**	**Drawing Title**	**Date**
0001	C07	BELOW GROUND DRAINAGE DRAINAGE STRATEGY	C07

CONSTRUCTION

Notes:

This Drawing is to be read in conjunction with all relevant Architect's Engineer's and specialists' drawings and specifications.

Do not scale from this drawing in either paper or digital form. Use written dimensions only.

SDS to leave solid stub only, exiting tank for connection by others.

All external Manholes, Access Points, Junctions & Pipe are shown for guidance only and not part of the SDS program unless otherwise agreed.

Rev	Comments	Date	DRW	CHK
-	ISSUED FOR CONSTRUCTION	16.11.23	RJ	SP
-	ISSUED FOR APPROVAL	24.01.23	TB	SP

SDS Water Infrastructure Systems
Clearwater House
Castlemills
Biddisham
Somerset
BS26 2RE
+44 (0)1934 751303
sdslimited.com

Project: FIRST STREET SOUTH MANCHESTER

Client: MPB STRUCTURES

Title: ATTENUATION TANK 2 DETAIL

Scale: NTS | Date: 24.01.23

Drawing No: E278622_02 | Rev: -