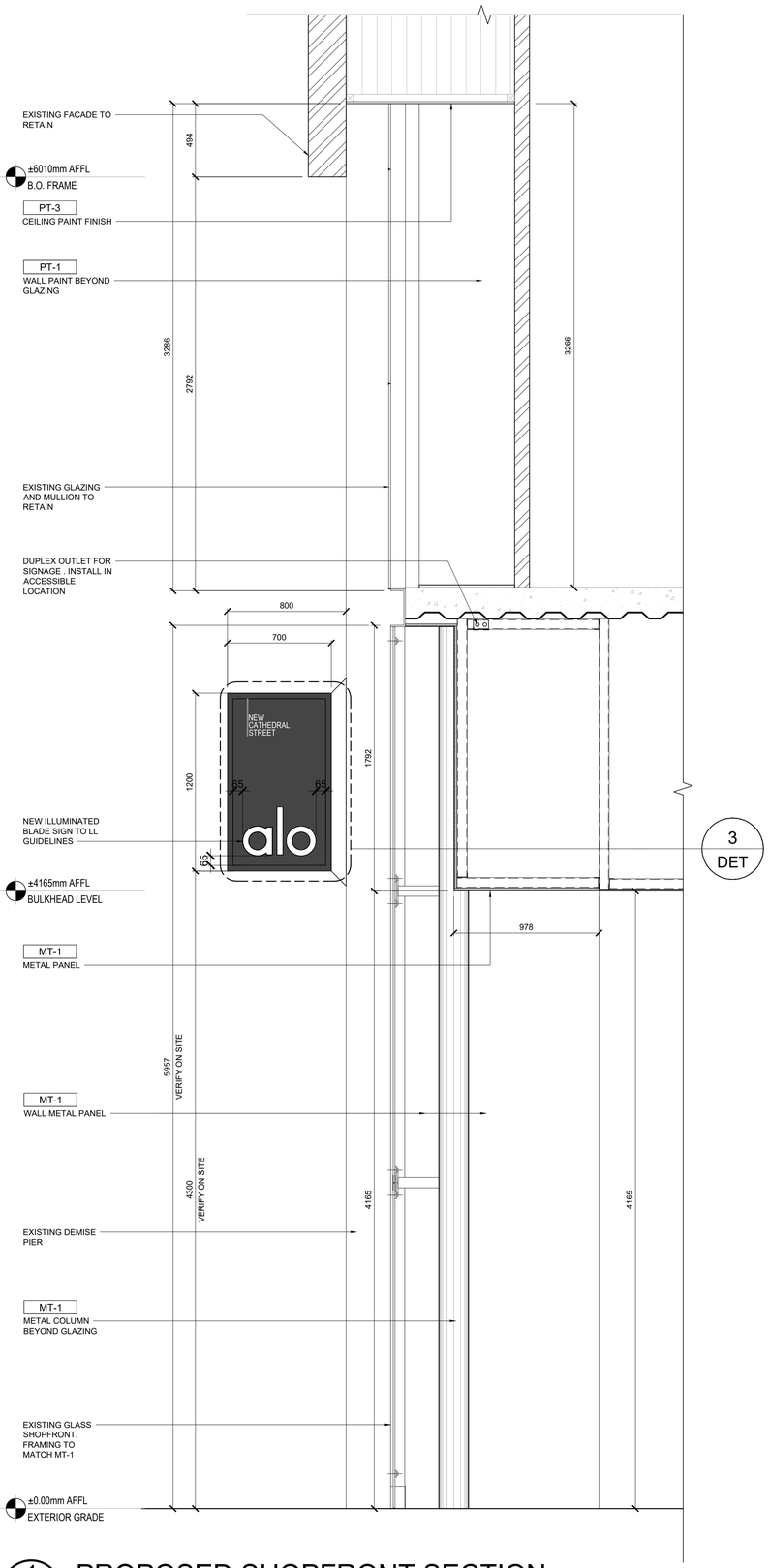


## 1 PROPOSED SHOPFRONT SECTION
scale 1:20

SCALE BAR 1:20
400mm 0 400mm 800mm 1200mm 1600mm 2000mm

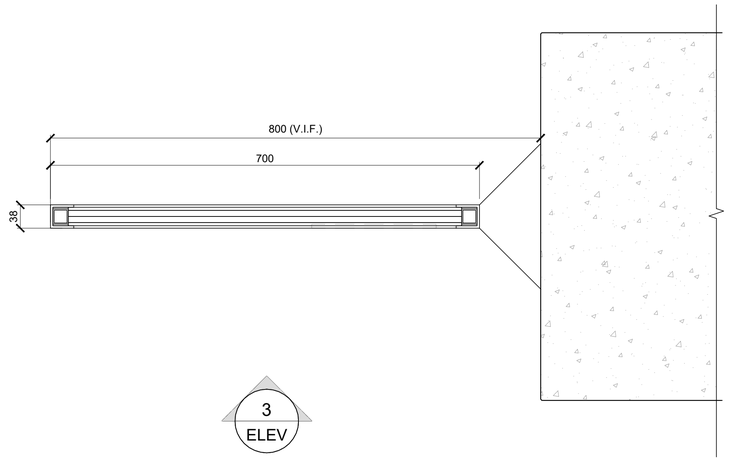


## 2 PROPOSED BLADE SIGN PLAN
scale 1:5

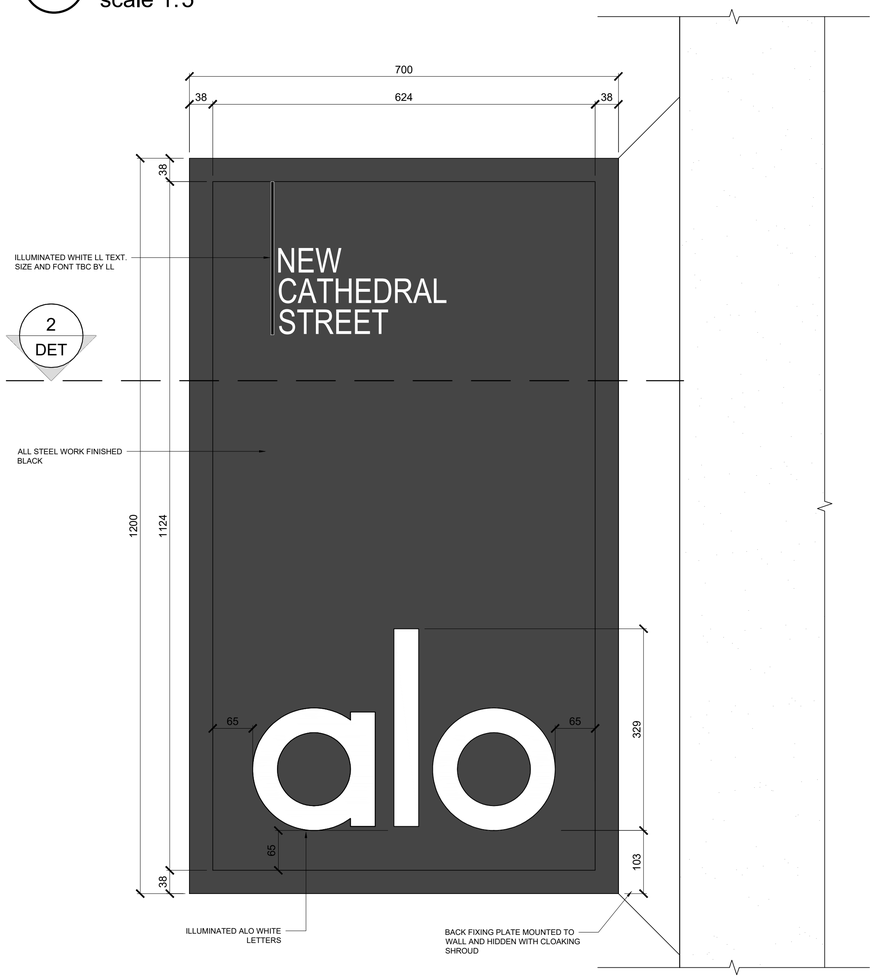


## 3 PROPOSED BLADE SIGN ELEVATION
scale 1:5

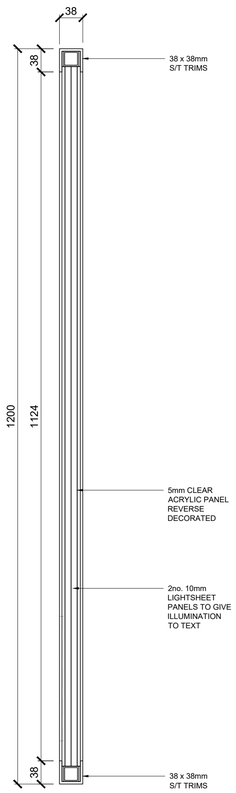


## 4 PROPOSED BLADE SIGN ELEVATION
scale 1:5

SCALE BAR 1:5
100mm 0 100mm 200mm 300mm 400mm 500mm

**GENERAL NOTES**

This drawing is the property of zebra Projects Ltd and is not to be copied, reproduced, retained or disclosed to any unauthorised person, either wholly, electronically or in part without the written consent of zebra Projects Ltd.

**ILLUSTRATED BRIEF**

Any drawing prefixed with 'illustrated brief' in the drawing title block must not in any way be used on site as a construction drawing or used for final detailed costing.

**MAINTENANCE NOTES**

**PLEASE NOTE:**

ALL DIMENSIONS, DRAWINGS, DETAILS AND SPECIFICATIONS MUST BE VERIFIED BY CONTRACTORS PRIOR TO COMMENCEMENT OF WORKS.
PLEASE REPORT ANY ISSUES TO ZEBRA PROJECTS LTD PRIOR TO COMMENCEMENT OF WORKS.

ALL DRAWINGS AND DETAILS MUST BE APPROVED BY ZEBRA PROJECTS LTD PRIOR TO COMMENCEMENT OF WORKS.

ALL MATERIALS MUST CONFORM TO CURRENT BUILDING STANDARDS AND HEALTH AND SAFETY REQUIREMENTS.

ALL SPECIFIED ITEMS OR EQUIPMENT MUST BE INSTALLED ACCORDING TO THE MANUFACTURER'S GUIDELINES.

ALL FINISHES MUST BE APPROVED BY ZEBRA PROJECTS LTD PRIOR TO COMMENCEMENT OF WORKS.

FOR SETTING OUT PURPOSES, DIMENSIONS SHOULD BE TAKEN FROM THE ISSUED SETTING OUT DRAWINGS.

CONTRACTORS MUST APPROVE CONSTRUCTION DETAILS PRIOR TO COMMENCEMENT OF WORKS AND SHOULD ADVISE SUITABLE ALTERNATIVES WHERE NECESSARY.

THIS DRAWING MUST BE READ IN CONJUNCTION WITH ALL ASSOCIATED DRAWINGS. PLEASE NOTIFY ZEBRA PROJECTS LTD SHOULD ANY DISCREPANCIES BE IDENTIFIED.

DESIGN AND COPYRIGHT OF ZEBRA PROJECTS LTD.

**IFC**

| REVISION | | INIT | DATE |
|---|---|---|---|
| D | IFC ISSUED | GM | 02.06.2025 |
| C | REVISED FOLLOWING BRAND COMMENTS | GM | 23.04.2025 |
| B | REVISED FOLLOWING BRAND COMMENTS | SE | 11.04.2025 |
| A | FIRST ISSUE | GM | 29.03.2025 |

**CAD REFERENCE**
W:\DESIGN\BRANDS\ALO YOGA\NEW BUILT\40300_ALO YOGA_ARNDALE CENTER_MANCHESTER_UK\Cad drawings\Current\PLANNING PACK

**CLIENT**
alo

**PROJECT TITLE**
ALO
MANCHESTER ARNDALE,
MANCHESTER, UK

**DRAWING TITLE**
PROPOSED SHOPFRONT SECTION AND BLADE SIGN DETAILS

| | |
|---|---|
| AS SHOWN @ A1 | 27-FEB-2025 |
| **SCALE** | **DATE** |
| 40300 | GM |
| **PROJECT NO.** | **DRAWN BY** |
| 073 | D |
| **DRAWING NO.** | **REVISION** |

zebra PROJECTS LTD
MANFIELD HOUSE
1 SOUTHAMPTON STREET
LONDON
ENGLAND
WC2R 0LR
TEL: +44 (0)20 7940 9040