Northern Fan Supplies Ltd
Technical Data Sheet
JM Aerofoil

Quotation Number	:	Project Code	:
Project Name	:	Customer	:
Item Reference:	:	Date:	: Monday, April 22, 2024

Fan Code	50JM/20/4/6/32
Fan Diameter / Size	500 Size / mm
Blades	6
Fan Speed	1420 rpm
Velocity	9.2 m/s
Blade Angle	32°
Installation Type / Form of Running	C / B (Horizontal)
Fan Casing	Long
Requested Duty	1.81m³/s @ 173 Pa (static)
Outlet Dynamic Pressure	51 Pa
Duty Shaft Power	0.612 kW
Max Shaft Power	0.626 kW
Total Efficiency	66.3 %
Motor Frame	CT9 [Class F]
Motor Rating	0.680 kW
Full Load Current	4.8 A
Starting Current	11 A
Motor Mounting	Pad
Electrical Supply	220-240 Volts 50 Hz 1 Phase
Start Type	DOL
Motor Winding	Standard
Enclosure	Standard All
ErP [FMEG] Rating	N 40 (ErP Compliant)
ErP [FMEG] Target	N 40
FMEG Blade Angle [Range]	32° [32° - 34°]
Measurement Category	C (Static)
VSD	N
Fan + Motor Efficiency	34.3% (1.58 m³/s @ 206 Pa)
Motor Input Power (ErP)	0.947 kW
SFP value	0.52 W/(l/s) @ Requested Duty
Power from mains	0.95 kW
Energy Consumption	2838 kWh (3000 h/year)
Running Cost / Year	£341
Air Density	1.2 kg/m³ / 20 °C / 0 m / 40% RH
Smoke Venting	Non Smoke Venting
Product Number	EJ511466

Performance data has been derived from tests carried out in a Flakt Woods laboratory, in accordance with ISO 5801 and is specifically applicable for Ducted installations. When an electronic controller is incorporated, enhanced motor noise can occur - particularly when the operating speed is well below maximum. FWL therefore recommend using an auto transformer speed controller for noise sensitive applications. Bifurcateds are Erp exempt when used continuously at >100C. They are not for use in the EEA at lower temperatures.

Acoustic data has been derived from tests carried out in a Flakt Woods laboratory, in accordance with BS 848 Pt 2, 1985 / ISO 5136 under Ducted conditions. The LpA figure provided is the overall Inlet sound pressure level calculated at the specified distance, under spherical, free field conditions. Breakout levels stated are estimated from induct sound power levels and are provided for guidance.

Acoustic figures for adjusted running speeds have been interpolated and are for reference only.

This Offer is made subject to the latest version of our A100-19 Terms and Conditions, a copy of which can be made available on request. Our lead times will be re-confirmed on receipt of manufacturing release and may be subject to change.

	Sound Spectrum (Hz)								Overall	
	63	125	250	500	1k	2k	4k	8k	Lw*	LpA @ 3 m**
Inlet*	76	78	76	74	72	69	65	61	83	56
Outlet*	78	79	76	74	73	70	67	62	83	57
Breakout*	78	79	76	74	73	70	67	62	83	57

* Lw dB re 10^{-12} W ** dBA re $2x10^{-5}$ Pa

Sound data at requested duty.

Description	Qty
Fan	
EJ511466 - 50JM/20/4/6/32	1
Accessories	
Thermostat	1

Unit E1 Longford trading Estate
Thomas Street, Stretford, Manchester, , M32 0JT
Tel: 0161 864 1777 Fax: 0161 864 2777
Website: www.nfan.co.uk
Email: kyle@nfan.co.uk
Copyright Fläkt Group 2003 - 2020

Northern Fan Supplies Ltd
Performance Chart
JM Aerofoil

Quotation Number	:	Project Code	:
Project Name	:	Customer	:
Item Reference:	:	Date:	: Monday, April 22, 2024
		Fan Code	: 50JM/20/4/6/32

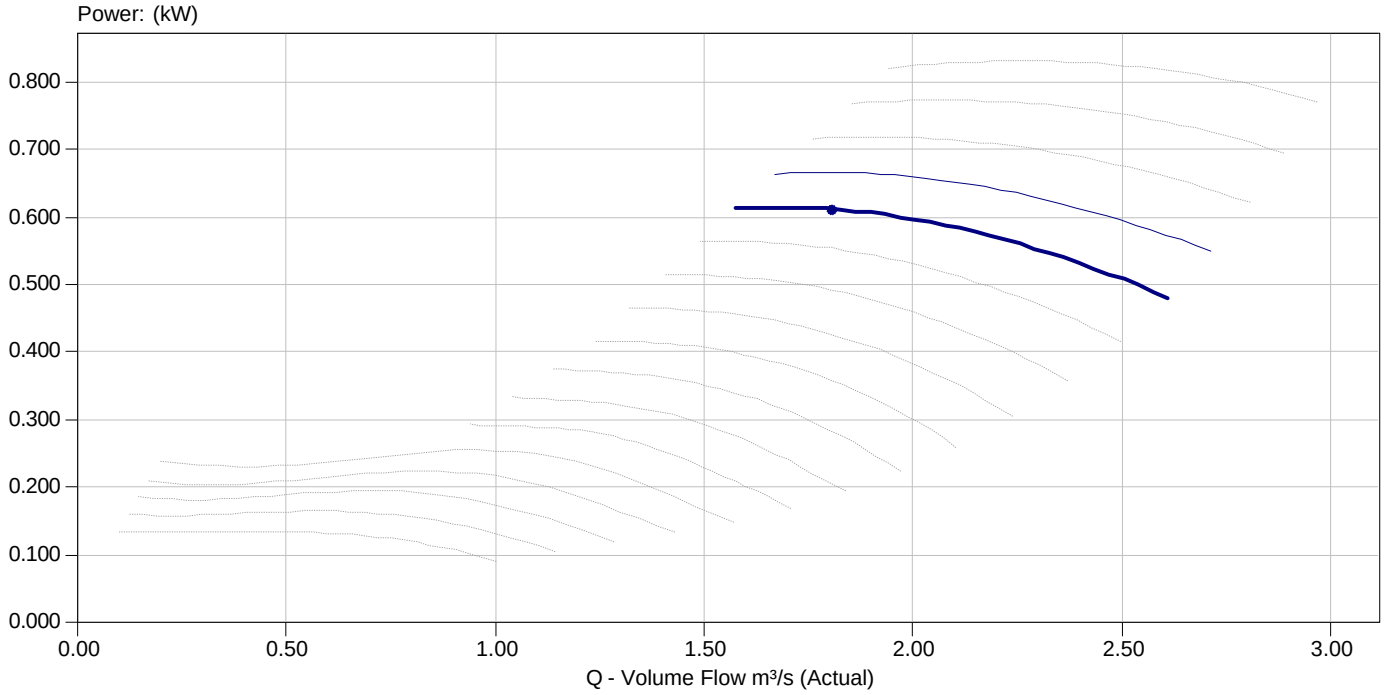

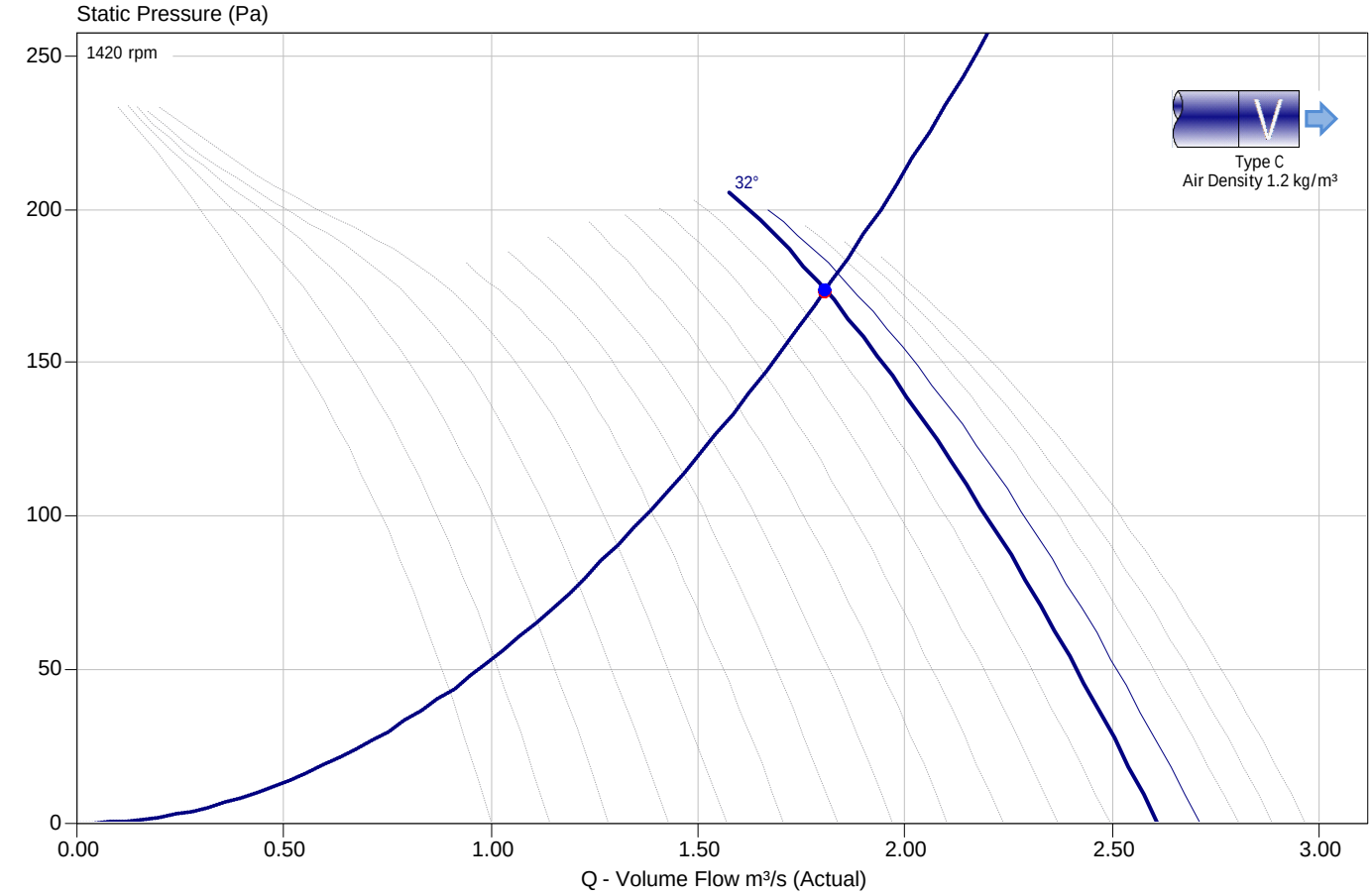

Unit E1 Longford trading Estate
Thomas Street, Stretford, Manchester, , M32 0JT
Tel: 0161 864 1777 Fax: 0161 864 2777
Website: www.nfan.co.uk
Email: kyle@nfan.co.uk
Copyright Fläkt Group 2003 - 2020

Northern Fan Supplies Ltd
Drawing and Dimensions
JM Aerofoil

Quotation Number	:	Fan Code	: 50JM/20/4/6/32
Project Name	:	Customer	:
Item Reference:	:	Date:	: Monday, April 22, 2024

C	330
E	2.5
K	289
Weight (kg)	34

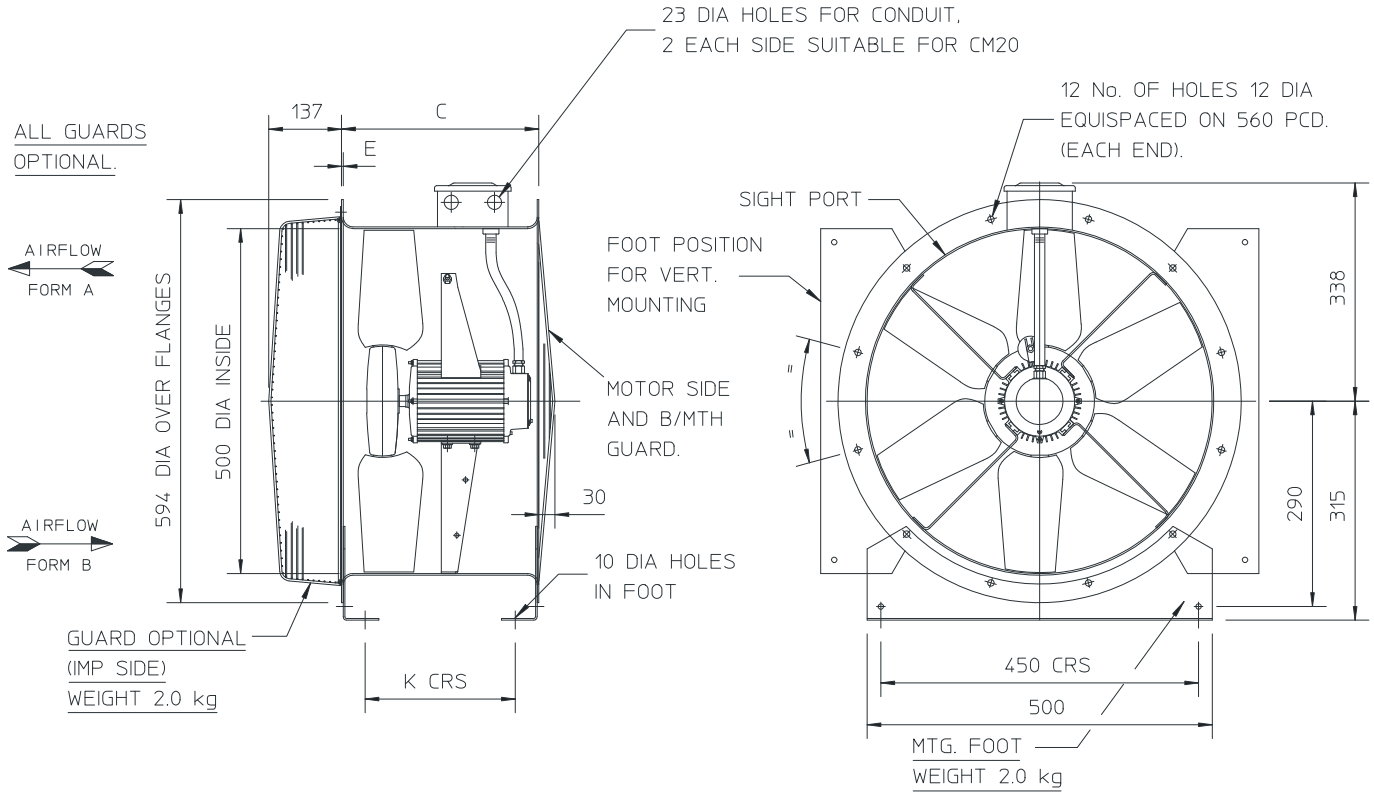

Notes : Dimensions shown in mm / Weight in kg

Reference :D269014

This drawing shows dimensions that should be used as a guide only and are subject to change. Certified drawings are available on request.

Unit E1 Longford trading Estate
Thomas Street, Stretford, Manchester, , M32 0JT
Tel: 0161 864 1777 Fax: 0161 864 2777

Website: www.nfan.co.uk
Email: kyle@nfan.co.uk

Copyright Fläkt Group 2003 - 2020