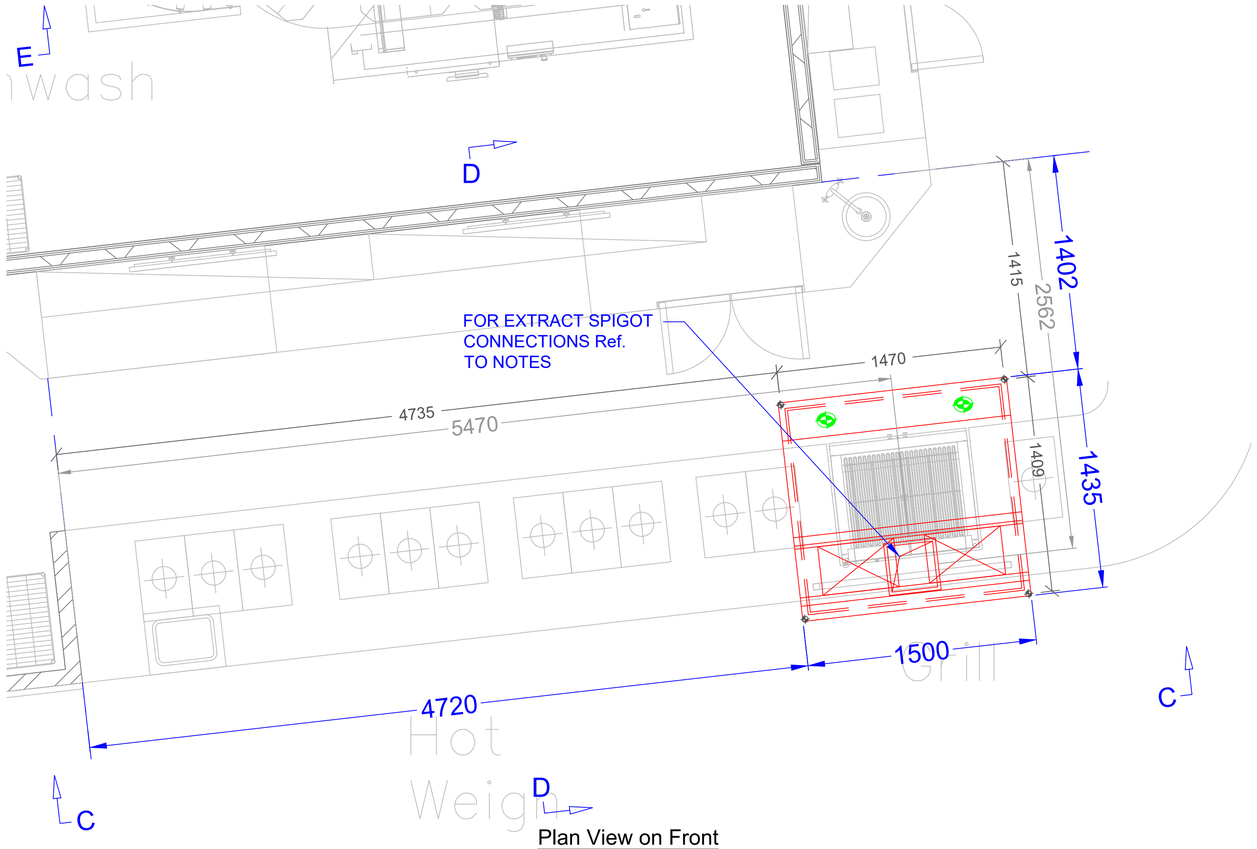

Plan View on Front
of House Canopy Installation

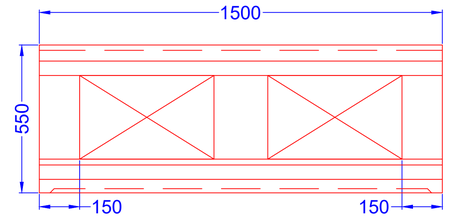

Fabrication on Baffle Filters

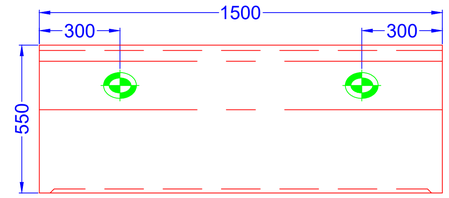

Fabrication on Supply Grills

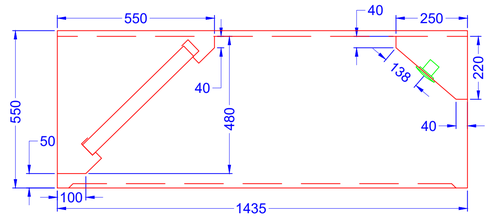

Fabrication on Profile

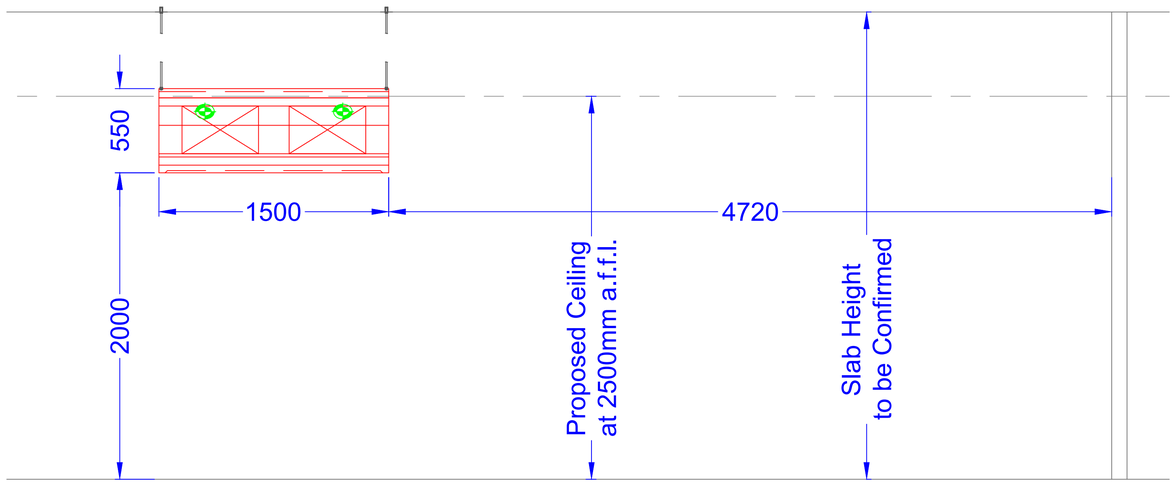

Installation on Elevation C - C

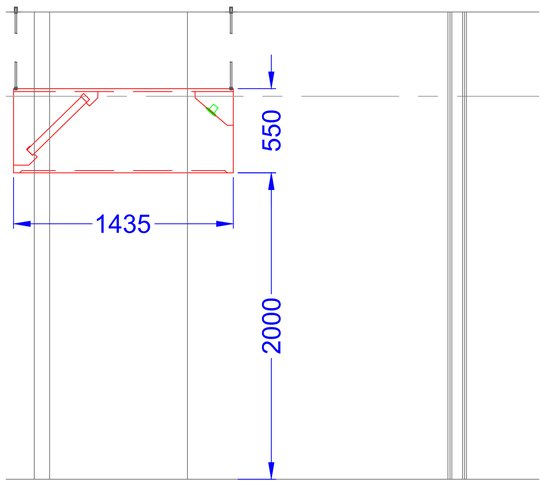

Installation on
Elevation D - D

Disclaimer Notice

PLEASE DO NOT SCALE FROM DRAWING

All dimensions / sizes shown are for reference purposes only.
All contractors are to carry out site surveys to determine correct measurements for all shopfitting / fabrication works.

No responsibility shall be bourne by RDA Limited should contractors fail to carry out site surveys to determine their requirements.

This drawing and any subsequent related drawings constitute an outline conceptual scheme only and may be subject to revision after completion of a full measured and structural survey and approval. No local authorities have yet been consulted regarding town planning, building control, emergency services, licensing and other relevant approvals, this scheme must be considered as possibly subject to consequent revision after this consultation process has been completed.

Copyright Notice

This drawing was created in AutoCAD LT 2020 and is the property of RDA Limited. No part of this drawing may be reproduced without the express and written consent of Restaurant Design Associates Ltd.

INSTALLATION NOTES.
EXTRACT.
- EXTRACT AIR FLOW RATE CALCULATED AT 0.589m³/s
- CANOPY TO BE SUPPLIED C/W 1off EXTRACT SPIGOT CONNECTIONS 300 x 300 x H100mm, THESE ARE SUPPLIED LOOSE WITH CANOPY FOR INSTALLATION AT TIME OF HOOD.
- ANTICIPATED PRESSURE LOSS ACROSS EXTRACT 150Pa.

AIR SUPPLY.
- AIR SUPPLY FLOW RATE CALCULATED AT 0.501m³/s BASED ON 85% SUPPLY AIR DIRECT TO HOOD.
- AIR SUPPLY VALUE INCLUDED FOR INFORMATION ONLY, M&E CONTRACTOR TO TAKE INTO ACCOUNT.

CANOPY FABRICATION NOTES.
- TO BE MANUFACTURED IN FINE GRAIN 304St/St.
- TO BE SUPPLIED COMPLETE WITH 2off 500x500mm St/St. BAFFLE FILTERS.
- TO BE FABRICATED COMPLETE WITH 2off LED DOWN LIGHT SPOTLIGHTS Inc. FLEX TAIL FOR CONNECTION BY OTHERS.
- APPROXIMATE CANOPY WEIGHT 110Kg's
- CANOPY TO BE FABRICATED IN 1off SECTIONS.

rev	description	date	by
A	Initial issue released for comments	30.07.25	JH

Client: BNY

Project Number: 4607–6

Project Title: 4 Angel Square Manchester

Site Address: 4 Angel Square
City Centre
Manchester
M60 0AG

Area: F.O.H. Canopy Id.16

Drawing Title: Canopy Fabrication and Installation Drawing

Drawing No: BAC–13020C2

Revision: A

Project Status	Drawn By	Drawing Date	Scale	Size
Provisional	JH	30.07.25	1: 25	A1

DESIGN > SUPPLY > INSTALL

Tel: 0844 873 4993
E–mail: info@rdalimited.co.uk