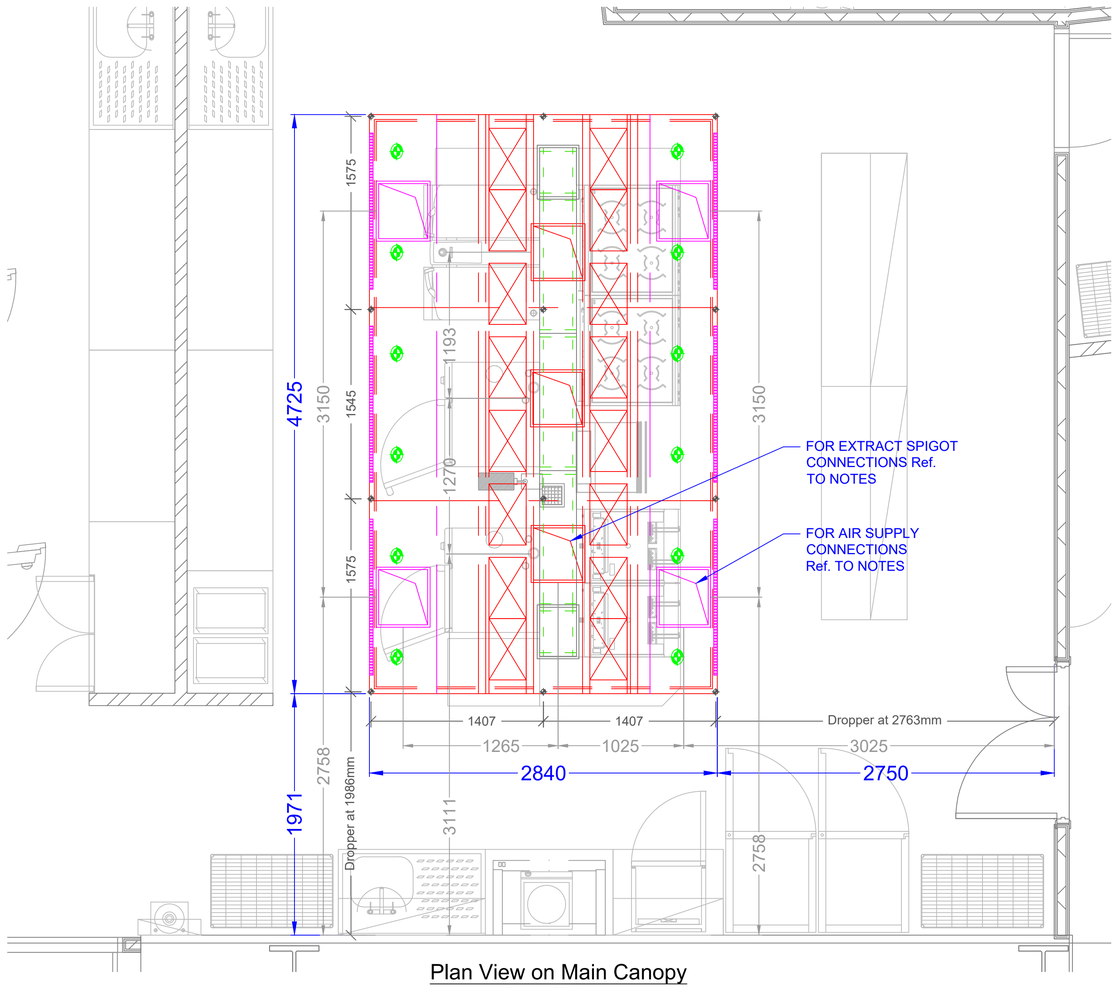

Plan View on Main Canopy Installation

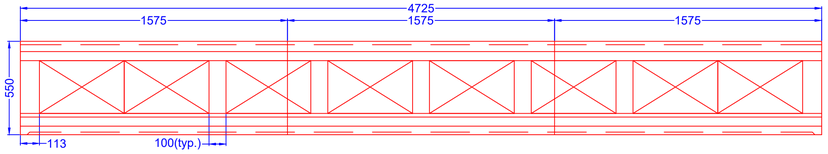

Fabrication on Baffle Filters

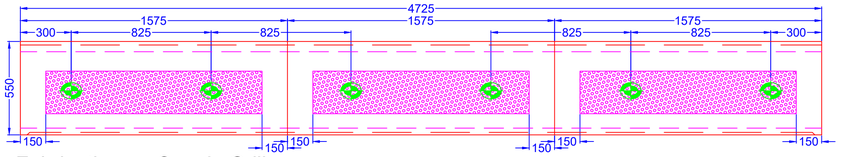

Fabrication on Supply Grills

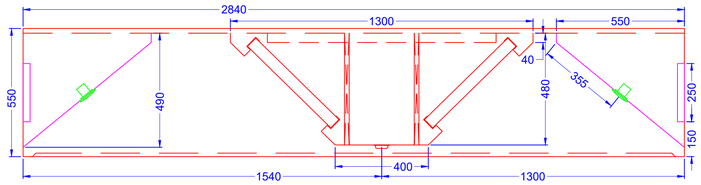

Fabrication on Profile

INSTALLATION NOTES.
EXTRACT.
- EXTRACT AIR FLOW RATE CALCULATED AT 3.261m³/s
- CANOPY TO BE SUPPLIED C/W 3off EXTRACT SPIGOT CONNECTIONS 400 x 425 x H100mm, THESE ARE SUPPLIED LOOSE WITH CANOPY FOR INSTALLATION AT TIME OF HOOD.
- ANTICIPATED PRESSURE LOSS ACROSS EXTRACT 150Pa.

AIR SUPPLY.
- AIR SUPPLY FLOW RATE CALCULATED AT 2.772m³/s BASED ON 85% SUPPLY AIR DIRECT TO HOOD.
- CANOPY TO BE SUPPLIED C/W 4off AIR SUPPLY SPIGOT CONNECTIONS 400 x 450 x H100mm, THESE ARE SUPPLIED LOOSE WITH CANOPY FOR INSTALLATION AT TIME OF HOOD.
- CANOPY TO INCLUDE 6off PERFORATED AIR SUPPLY GRILLS 1275 x 250mm.
- ANTICIPATED PRESSURE LOSS ACROSS AIR SUPPLY 95Pa.

CANOPY FABRICATION NOTES.
- TO BE MANUFACTURED IN FINE GRAIN 304St/St.
- TO BE SUPPLIED COMPLETE WITH 16off 500x500mm St/St. BAFFLE FILTERS.
- TO BE FABRICATED COMPLETE WITH 12off LED DOWN LIGHT SPOTLIGHTS Inc. FLEX TAIL FOR CONNECTION BY OTHERS.
- APPROXIMATE CANOPY WEIGHT 360Kg's
- CANOPY TO BE FABRICATED IN 3off SECTIONS.

S.D.U. FABRICATION NOTES.
- S.D.U. FRAME TO BE FABRICATED IN 30x30mm BOX SECTION.
- MAIN PANELS TO BE MANUFACTURED IN 304St.St.
- RISER COLLARS TO BE MADE AT 400 x 300mm TO SUIT RISER SECTIONS.
- LEG SECTIONS TO REMAIN OPEN TO ALLOW FOR SERVICES INSTALLATION AND VENTILATION.

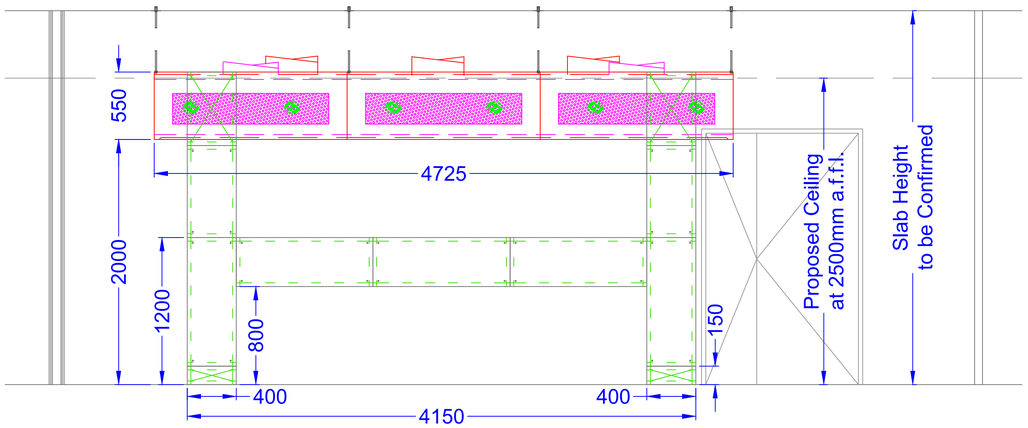

Canopy Installation on Elevation A - A

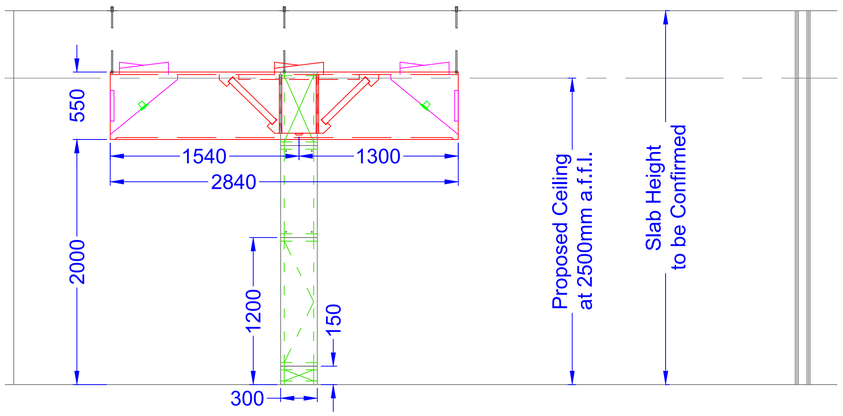

Canopy Installation on Elevation B - B

Disclaimer Notice

PLEASE DO NOT SCALE FROM DRAWING

All dimensions / sizes shown are for reference purposes only.
All contractors are to carry out site surveys to determine correct measurements for all shopfitting / fabrication works.

No responsibility shall be bourne by RDA Limited should contractors fail to carry out site surveys to determine their requirements.

This drawing and any subsequent related drawings constitute an outline conceptual scheme only and may be subject to revision after completion of a full measured and structural survey and approval. No local authorities have yet been consulted regarding town planning, building control, emergency services, licensing and other relevant approvals, this scheme must be considered as possibly subject to consequent revision after this consultation process has been completed.

Copyright Notice

This drawing was created in AutoCAD LT 2020 and is the property of RDA Limited. No part of this drawing may be reproduced without the express and written consent of Restaurant Design Associates Ltd.

rev	description	date	by
A	Initial issue released for comments	30.07.25	JH

Client: BNY

Project Number: 4607–6
Project Title: 4 Angel Square Manchester

Site Address: 4 Angel Square, City Centre, Manchester, M60 0AG
Area: Main Canopy Id.48
Drawing Title: Canopy Fabrication and Installation Drawing

Drawing No: BAC–13328C1
Revision: A

Project Status	Drawn By	Drawing Date	Scale	Size
Provisional	JH	29.07.25	1:25	A1

DESIGN > SUPPLY > INSTALL

Tel: 0844 873 4993
E–mail: info@rdalimited.co.uk