BUCCLEUCH LODGE 81.62 kWp
(Export Limitation - 20kW)

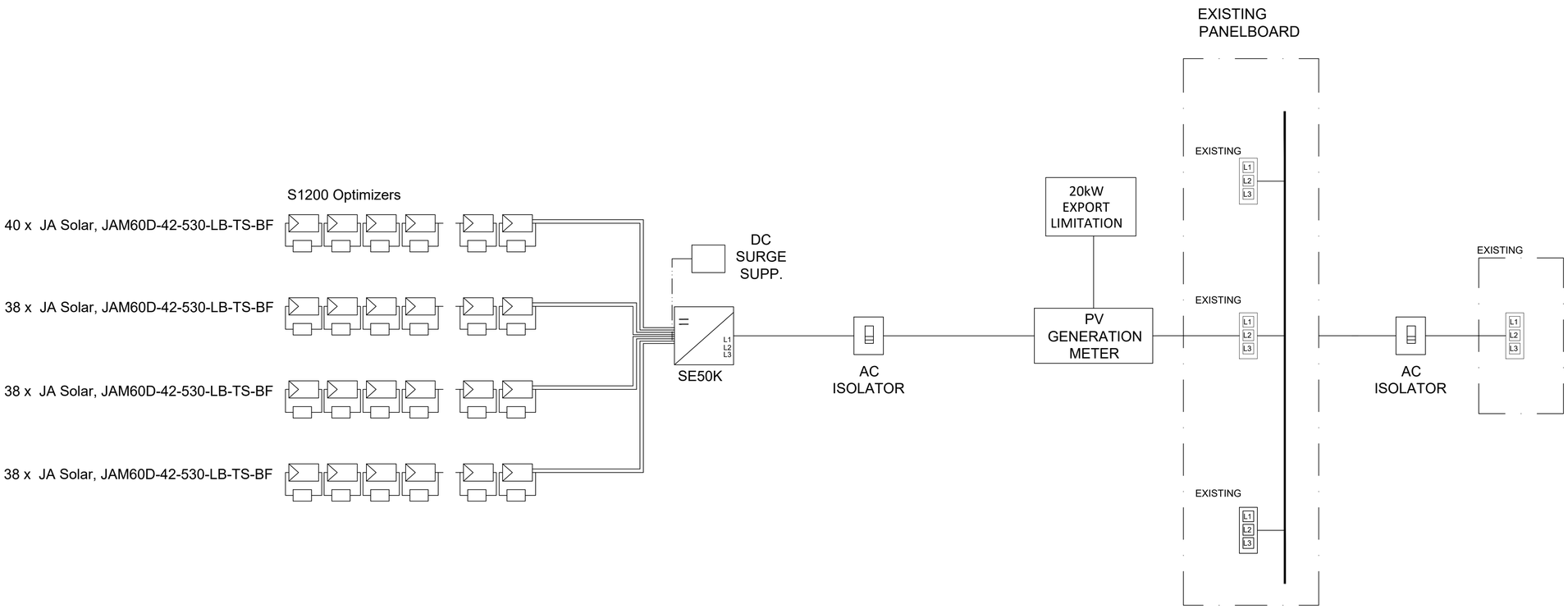

WARNING
Dual Supply

Do not work on this equipment until it is isolated from both mains and on-site generation supplies.

Isolate on-site generator at .....

Isolate mains supply at .....

This drawing contains proprietary information belonging to Revolution Energy Services Ltd and may not wholly or partially be reproduced nor disclosed without prior written permission of Revolution Energy Services Ltd

DO NOT SCALE FROM THIS DRAWING

Revisions:

Rev	Date	Comments	Drawn
00	05.25	FIRST ISSUE	CB

Client: BUCCLEUCH LODGE

Location: BUCCLEUCH LODGE
MANCHESTER,

Title: PV SINGLE LINE DIAGRAM

Drawn:	RES	Checked:	AM
Scale:	NTS@A1	Date:	27/05/25
Drawing No:	RES00347-1	Rev:	00

REVOLUTION
ENERGY SERVICES

Unit L3 Deacon Trading Estate, Morley Road, Tonbridge, Kent, TN9 1RA

www.revolutionenergyservices.co.uk

Do not scale from this drawing. Site verify all dimensions prior to construction. Report all discrepancies to the drawing orginator immediately. This drawing is to be read in conjunction with all relevant documents and drawings.