ISO Elevation

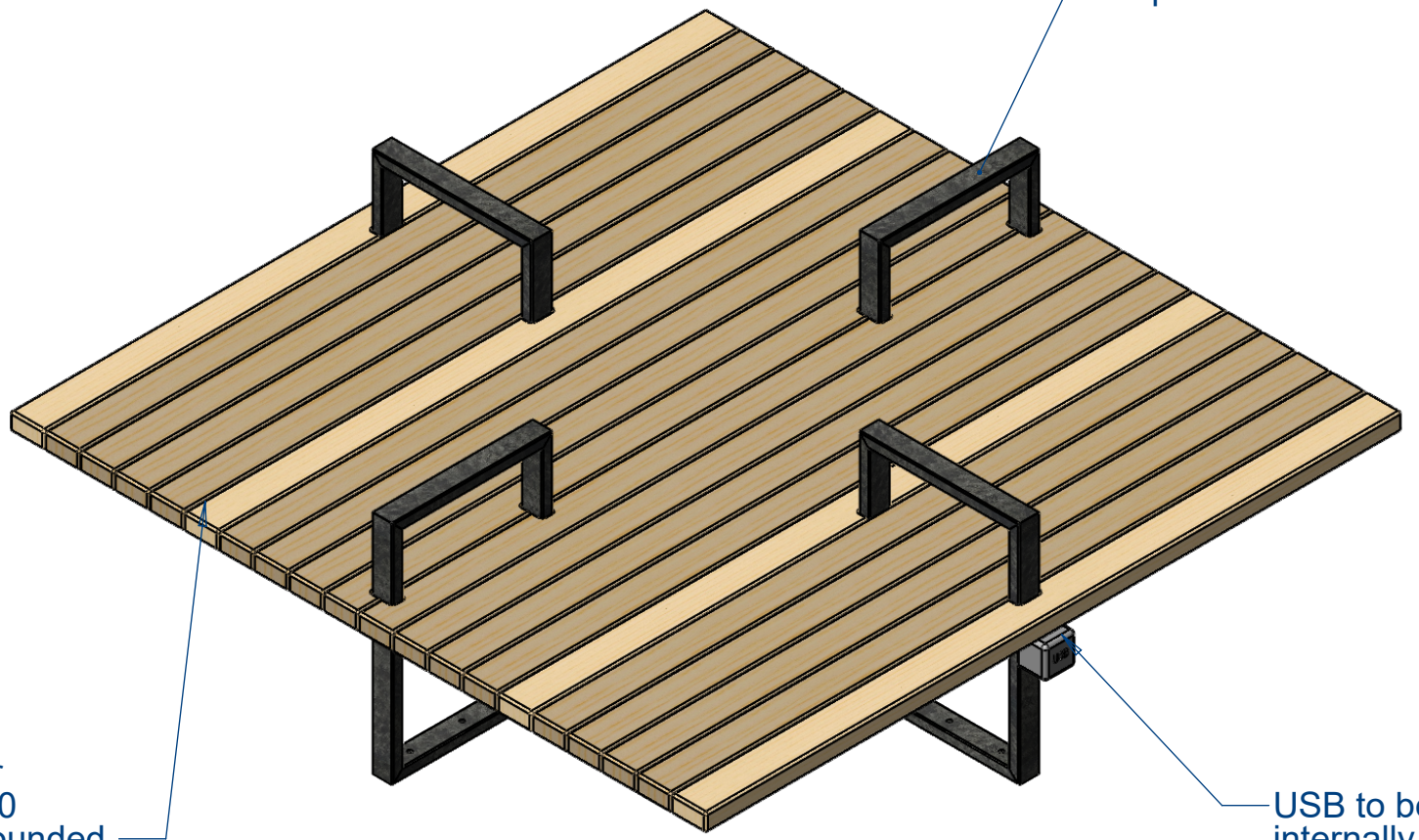

REVISIONS				
REV	AMENDMENTS/ NOTE	DATE	DRAWN	JJ
-	-	_/_/_	DATE	10/08/2020
-	-	_/_/_	Timber	class 3 timber
-	-	_/_/_	Metal	mild steel galvanised, linier finish
-	-	_/_/_	WEIGHT	---- KG
-	-	_/_/_	DO NOT SCALE DRAWINGS	LOGIC STREET FURNITURE ALL RIGHTS RESERVED
TOLERANCE: All dimensions tolerance +/- 5mm				

Product
square bench

Opportunity Name
circle square

Logic Manufacture Bespoke
Phone: 01642 373400 Email: hello@logic-bespoke.com

DWG. NO. LOG.7326.003.1

REV 1

SIZE A4

Timber Disclaimer: All hardwood timbers lose a degree of tanning, some more than others. Hardwood in an external environment is susceptible to cracking, shelling and moving due to the natural drying process, this does not take away from the durability of the product. In time hardwood may develop surface discolouration , this is caused by natural mould feeding on the tannins and should disperse as the timber dries and turns silver. Logic are not liable for this natural process and can not be held responsible for any of the processes listed.
All Logic products will bear some form of company branding

ISO Elevation

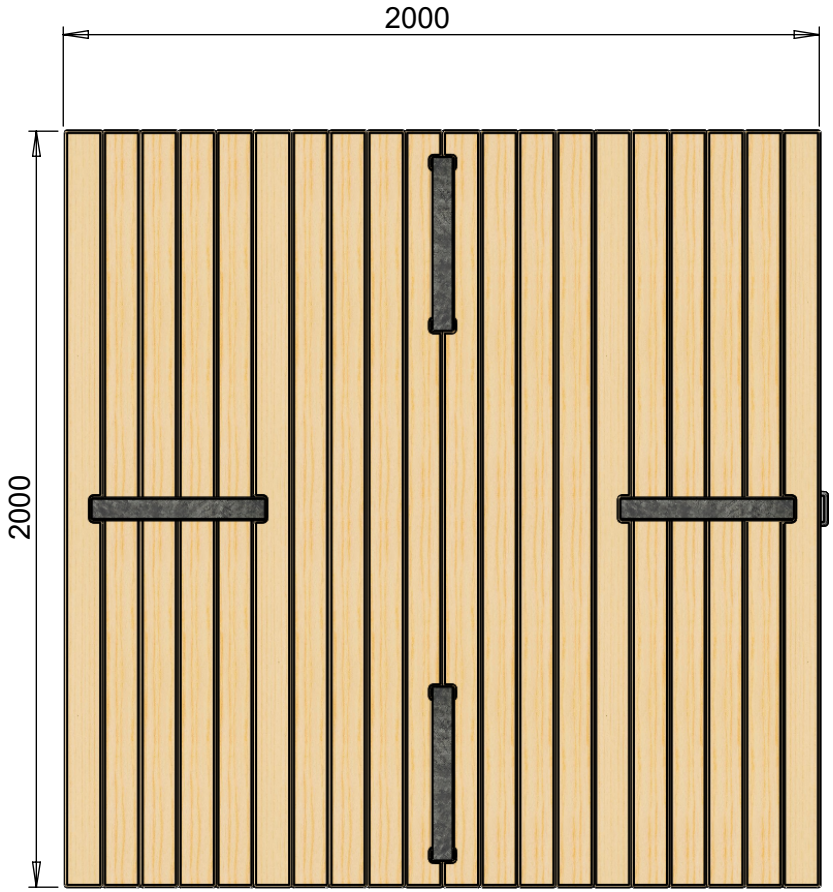

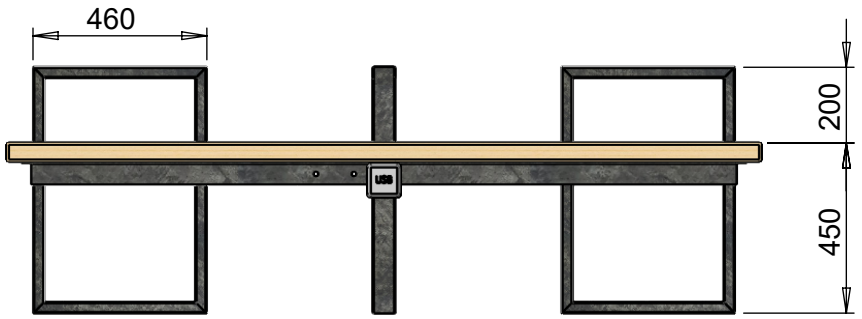

REVISIONS				
REV	AMENDMENTS/ NOTE	DATE	DRAWN	JJ
-	-	_/_/_	DATE	10/08/2020
-	-	_/_/_	Timber	class 3 timber
-	-	_/_/_	Metal	mild steel galvanised, linier finish
-	-	_/_/_	WEIGHT	---- KG
-	-	_/_/_	DO NOT SCALE DRAWINGS	LOGIC STREET FURNITURE ALL RIGHTS RESERVED
TOLERANCE: All dimensions tolerance +/- 5mm				

Product
square bench

Opportunity Name
circle square

Logic Manufacture Bespoke
Phone: 01642 373400 Email: hello@logic-bespoke.com

DWG. NO.
LOG.7326.003.2

REV 1

SIZE A4

Timber Disclaimer: All hardwood timbers lose a degree of tanning, some more than others. Hardwood in an external environment is susceptible to cracking, shelling and moving due to the natural drying process, this does not take away from the durability of the product. In time hardwood may develop surface discolouration , this is caused by natural mould feeding on the tannins and should disperse as the timber dries and turns silver. Logic are not liable for this natural process and can not be held responsible for any of the processes listed.
All Logic products will bear some form of company branding