SPINNINGFIELDS
DEANSGATE
HILTON
MANCHESTER CENTRAL
PICCADILLY GARDENS
MANCHESTER PICCADILLY
FIRST STREET
PICCADILLY
MANCUNIAN WAY
M602 SALFORD QUAYS
dep
LANDSCAPE ARCHITECTURE

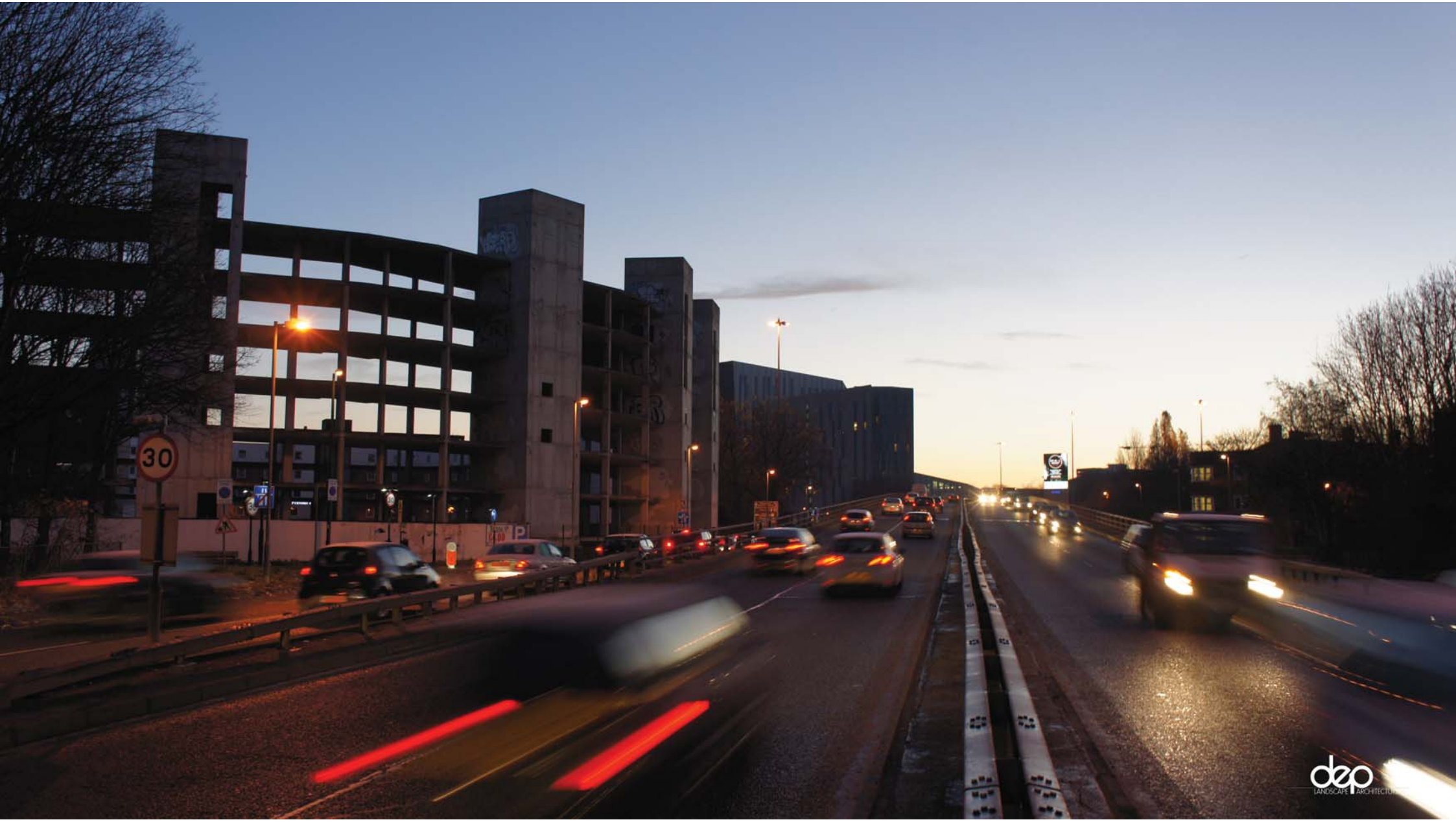
30
P


Never miss the genius
sky
unicef
Believe in better
All 5 Sky Sports channels in high definition. On
on Sky.
30


dep
LANDSCAPE ARCHITECTURE


More out of life
Samsung GALAXY S
Find out more about Samsung Galaxy S


30
dep
LANDSCAPE ARCHITECTURE


Never miss the genius
sky
Believe in better
unicef
All 5 Sky Sports channels in high definition. Only on Sky.
sky SPORTS HD 1
sky SPORTS HD 2
sky SPORTS HD 3
sky SPORTS HD 4
sky SPORTS NEWS HD
30
dep
LANDSCAPE ARCHITECTURE



LOCATION PLAN NOT TO SCALE

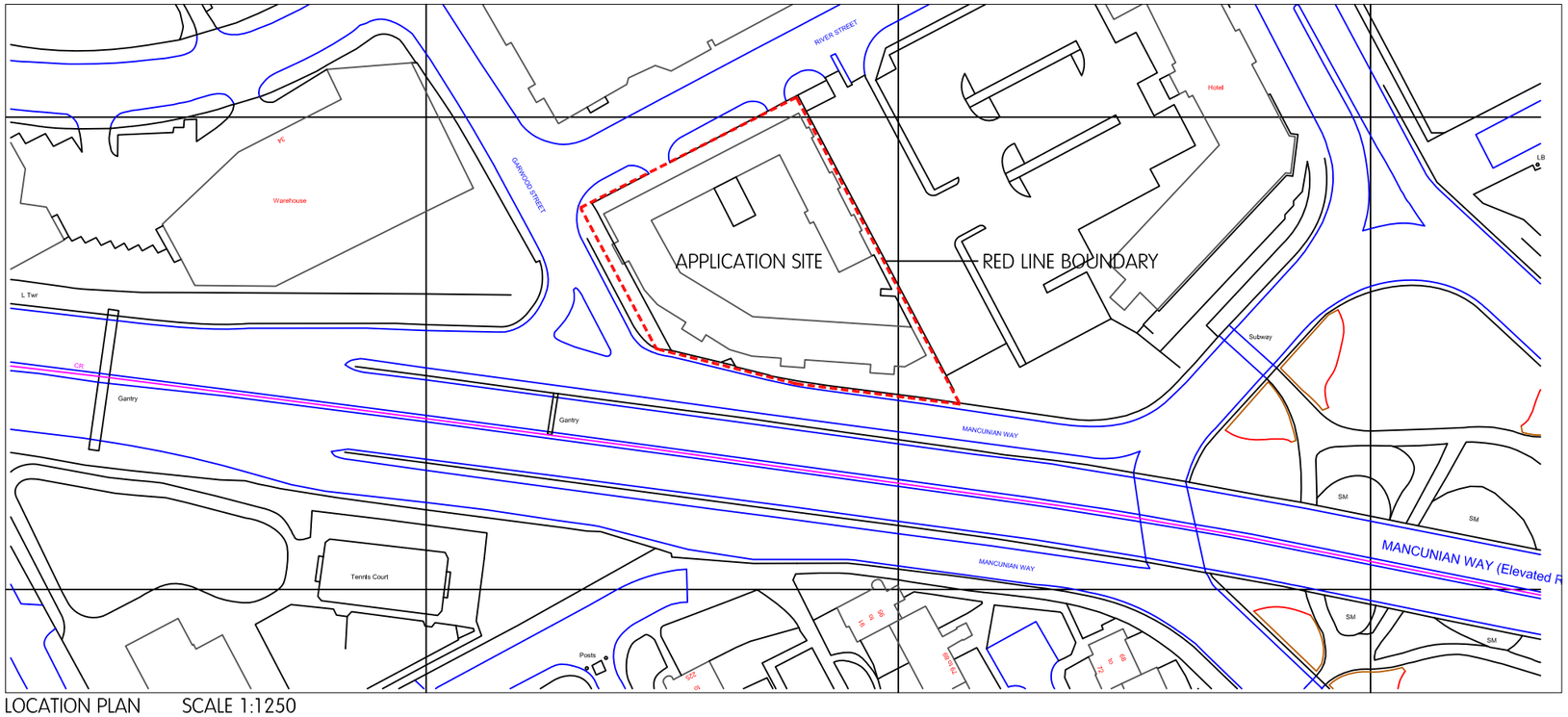

LOCATION PLAN SCALE 1:1250

NORTH

dep LANDSCAPE ARCHITECTURE

PROJECT:
MANCUNIAN WAY, MANCHESTER

CLIENT:
VIVID OUTDOOR MEDIA

TITLE:
LOCATION PLAN

DRAWING NUMBER:	REVISION:	DATE:
11_061_01	_	19/12/2012
SCALE:		**DRAWN BY:**
VARIES @ A3		CP

DEP Landscape Architecture
Landscape Design and Landscape Planning Consultants
Landmark House, Cheadle Hulme, SK8 7BS
T +44 (0)161 241 9878
E info@dep.co.uk
W www.dep.co.uk

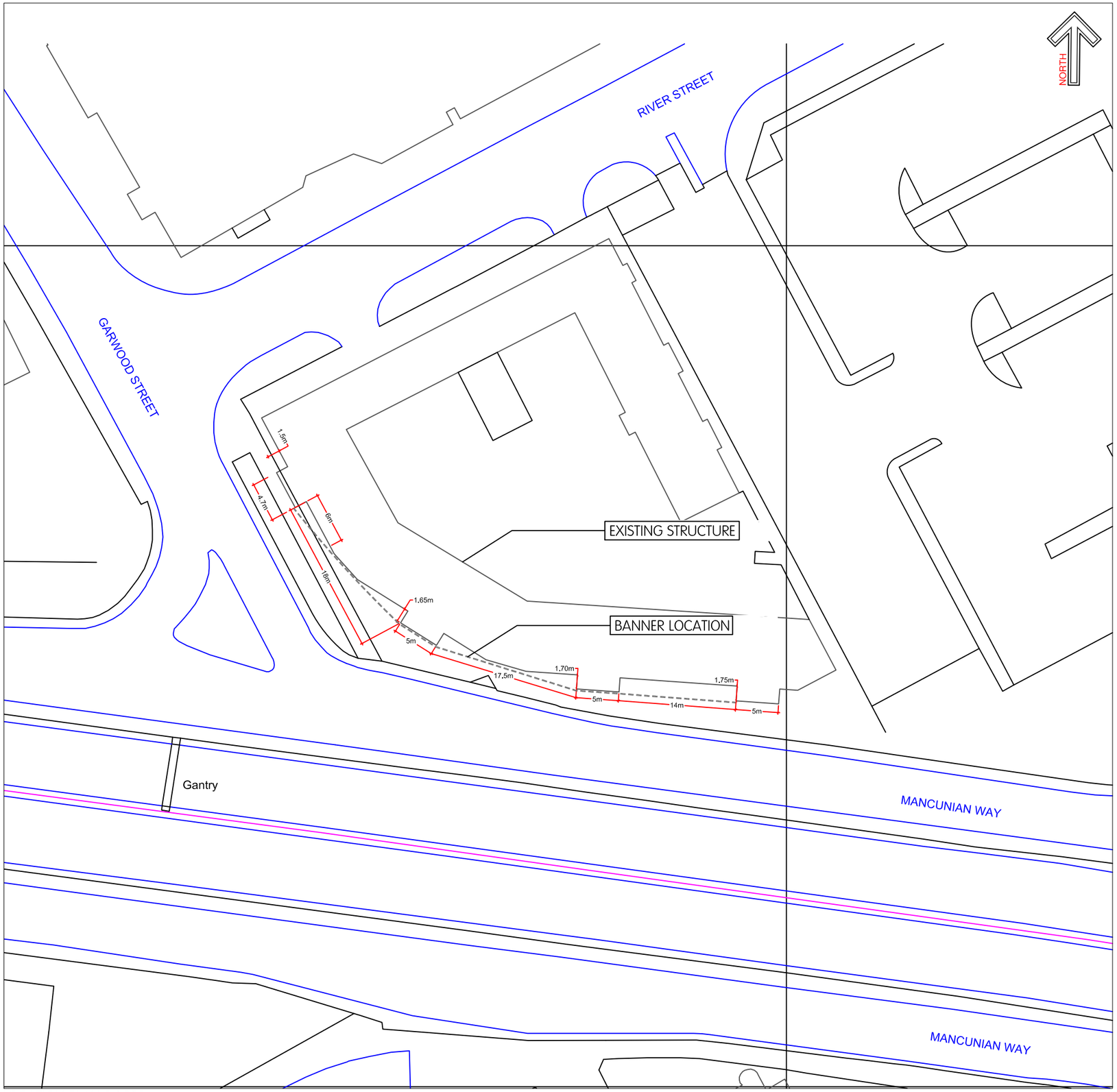

LOCATION PLAN 1:1250

Drawing Notes: -

- Banner to be maximum 59.5m in length.
- Banner height to cover 5 storeys (each floor 2.9m) totaling 14.5m
- Stair core openings to structure infilled where structure is left uncovered, and painted RAL 7015 (Slate grey)
- Banner to be illuminated downwards from lighting rigging across the top of the installation.

dep LANDSCAPE ARCHITECTURE

PROJECT:
MANCUNIAN WAY, MANCHESTER

CLIENT:
VIVID OUTDOOR MEDIA

TITLE:
PROPOSED SITE LAYOUT

DRAWING NUMBER:	REVISION:	DATE:
11_061_02	A	19/12/2012

SCALE:	DRAWN BY:
1:500 @ A3	CP

DEP Landscape Architecture
Landscape Design and Landscape
Planning Consultants
Landmark House, Cheadle Hulme, SK8 7BS
T +44 (0)161 241 9878
E info@dep.co.uk
W www.dep.co.uk

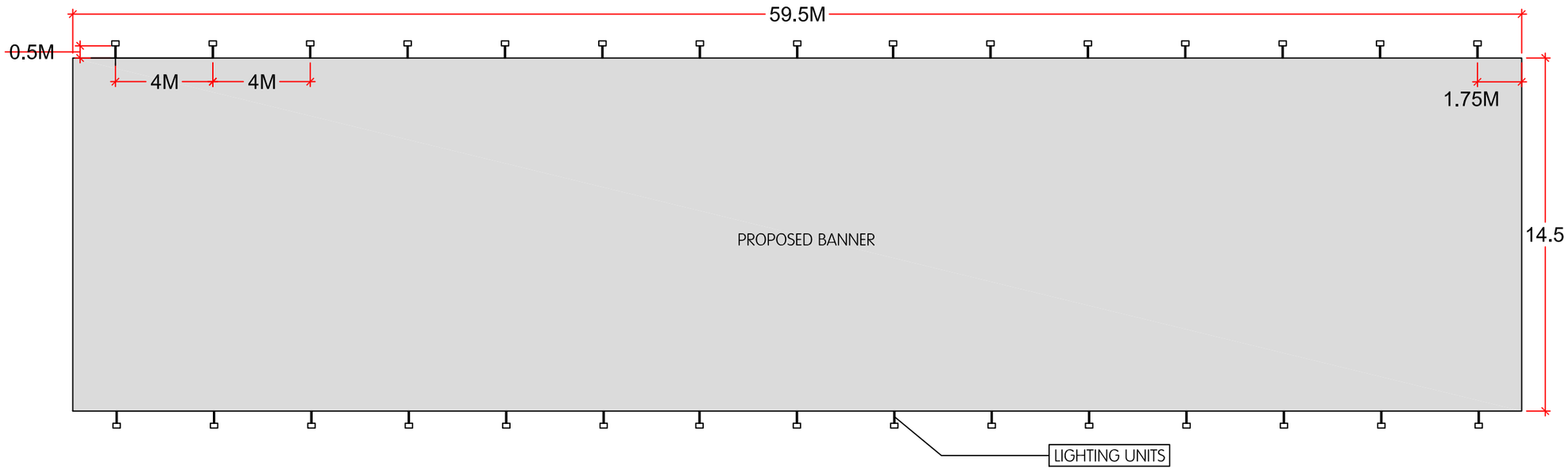

Drawing Notes: -

- Banner to be maximum 59.5m in length.
- Banner height to cover 5 storey's totaling 14.5m
- Stair core openings to structure infilled where structure is left uncovered, and painted RAL 7015 (Slate grey)
- Banner to be illuminated from top and bottom downwards from lighting rigging across the installation. See drawing 11_061_04 for details.
- Total 30 no. lighting units.

dep
LANDSCAPE ARCHITECTURE

PROJECT:
MANCUNIAN WAY, MANCHESTER

CLIENT:
VIVID OUTDOOR MEDIA

TITLE:
PROPOSED BANNER DIMENSIONS
AND LIGHTING LOCATIONS

DRAWING NUMBER:	REVISION:	DATE:
11_061_03	A	03/02/2013

SCALE:	DRAWN BY:
1:500 @ A3	CP

DEP Landscape Architecture
Landscape Design and Landscape
Planning Consultants
Landmark House, Cheadle Hulme, SK8 7BS
T +44 (0)161 241 9878
E info@dep.co.uk
W www.dep.co.uk

LAMP INFORMATION



FEATURES:-

- PROTECTIVE SYSTEM IP 65
- SOLID AND FUNCTIONAL DESIGN
- DIECAST ALUMINIUM HOUSING AND LID WITH COOLING RIBS
- PURE ALUMINIUM REFLECTOR
- WITH INTEGRATED BALLAST, IGNITER AND CAPACITOR
- WIND EXPOSED SURFACE ACT : 0,110M2, MIG 0,180M2

APPLICATION:-

- MONUMENTS / BRIDGES / INDUSTRIAL AREAS / BUILDING SITES / SPORTS FIELDS

LIGHT SOURCE - SEE BELOW - 400W METAL HALIDE.

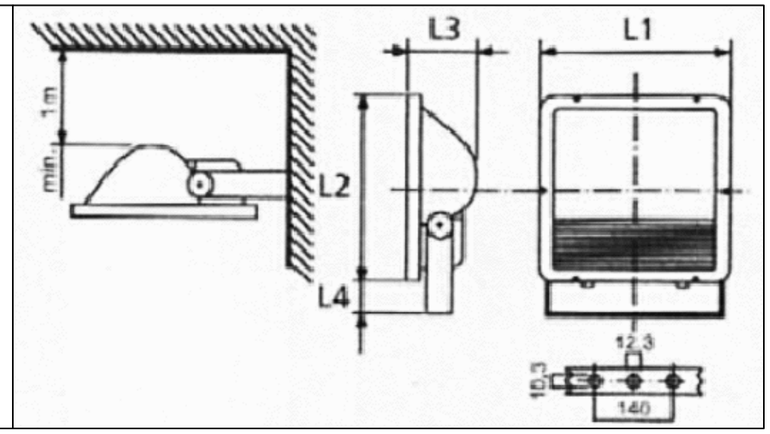

LIGHT SOURCE



TECHNICAL INFORMATION

- WATTAGE: 400W
- IGNITION VOLTAGE: (KV) 4.0
- LAMP CURRENT: 4.00 (A)
- BASE: E40
- AVERAGE LIFE: 8000HR
- COLOUR TEMPERATURE: 4200K
- LUMINOUS FLUX (LM): 42000
- RA VALUE: 2A
- OVERALL DIMENSION: 275MM
- BULB DIAMETER: 46MM
- BURNING POSITION: U360
- USE LAMPS ONLY IN SUITABLE FIXTURES WITH CORRESPONDING COVER GLASS
- MAXIMUM LAMP BASE TEMPERATURE: 220 DEG. C

dep LANDSCAPE ARCHITECTURE

PROJECT:
MANCUNIAN WAY, MANCHESTER

CLIENT:
VIVID OUTDOOR MEDIA

TITLE:
PROPOSED BANNER - LIGHTING DETAILS

DRAWING NUMBER:	REVISION:	DATE:
11_061_04	_	03/02/2013
SCALE:		**DRAWN BY:**
NOT TO SCALE		CP

DEP Landscape Architecture
Landscape Design and Landscape Planning Consultants
Landmark House, Cheadle Hulme, SK8 7BS
T +44 (0)161 241 9878
E info@dep.co.uk
W www.dep.co.uk

DETAILS OF FIXING BANNER TO SCAFFOLD

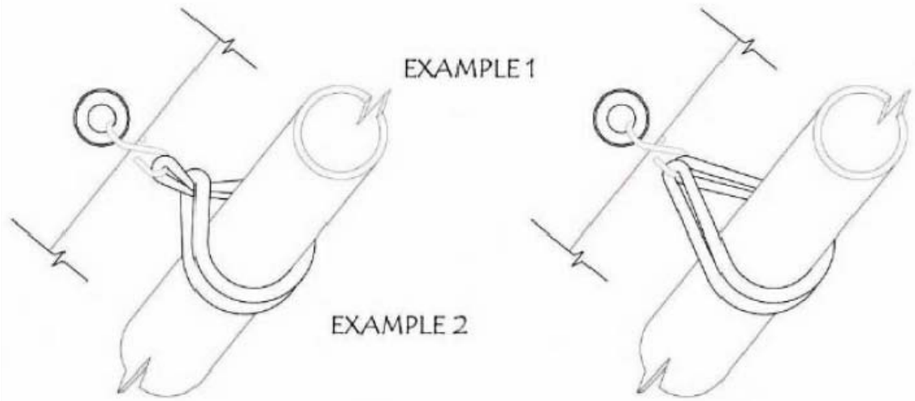

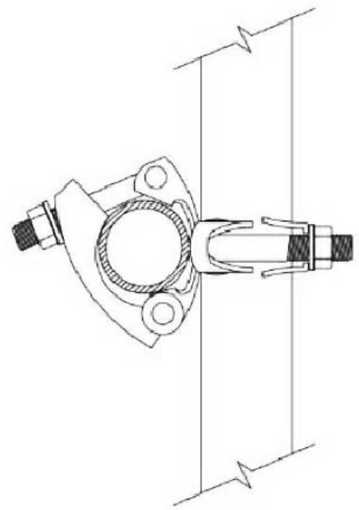

DRAWING SHOWING :
LIGHT BRACKET
FIXING METHOD.

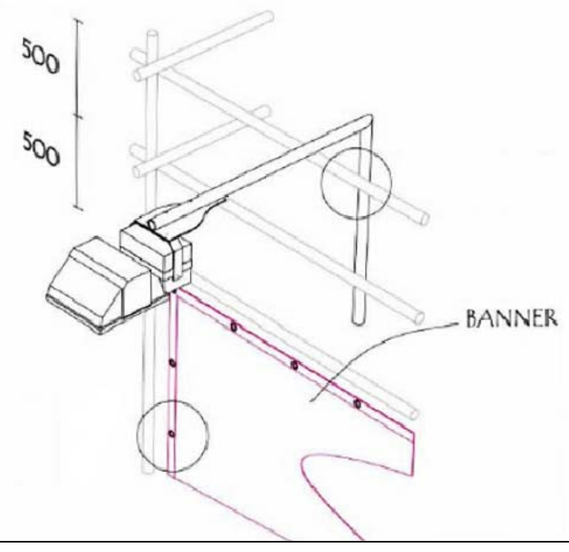

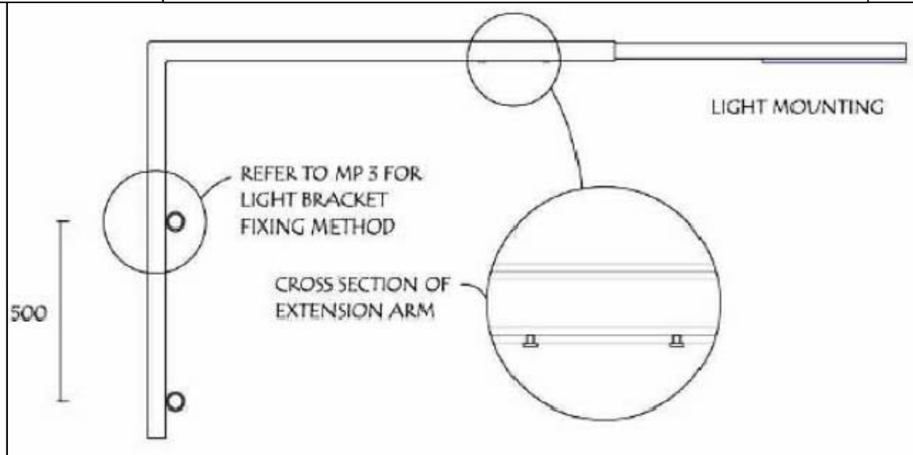

dep
LANDSCAPE ARCHITECTURE

PROJECT:
MANCUNIAN WAY, MANCHESTER

CLIENT:
VIVID OUTDOOR MEDIA

TITLE:
PROPOSED BANNER LIGHTING -
FIXING DETAILS

DRAWING NUMBER:	REVISION:	DATE:
11_061_05	_	03/02/2013

SCALE:	DRAWN BY:
NOT TO SCALE	CP

DEP Landscape Architecture
Landscape Design and Landscape
Planning Consultants
Landmark House, Cheadle Hulme, SK8 7BS
T +44 (0)161 241 9878
E info@dep.co.uk
W www.dep.co.uk

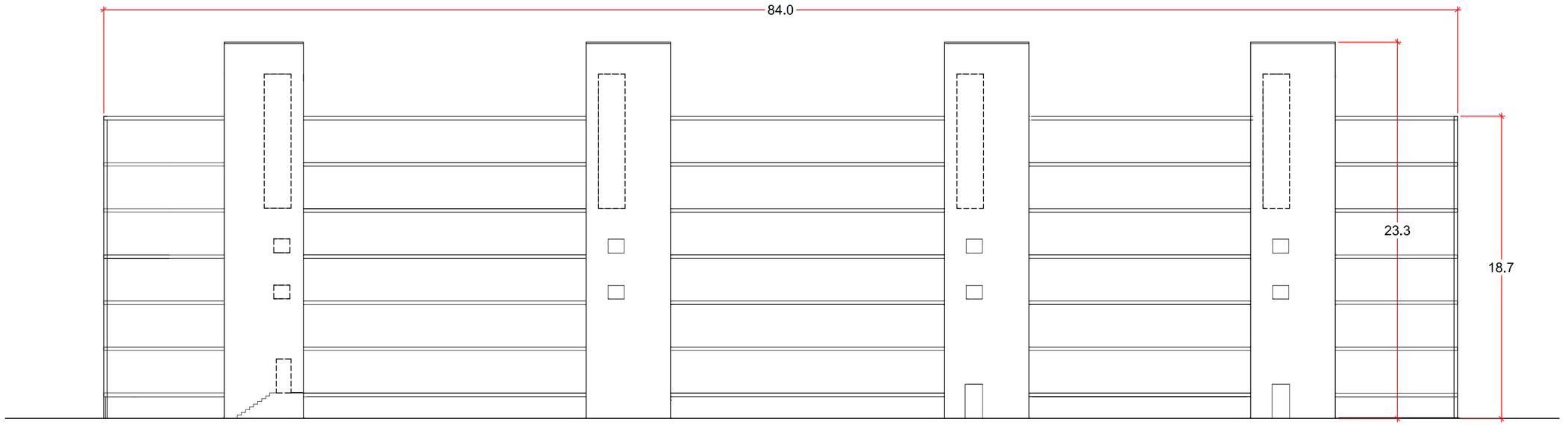

EXISTING ELEVATION A-A

1:200

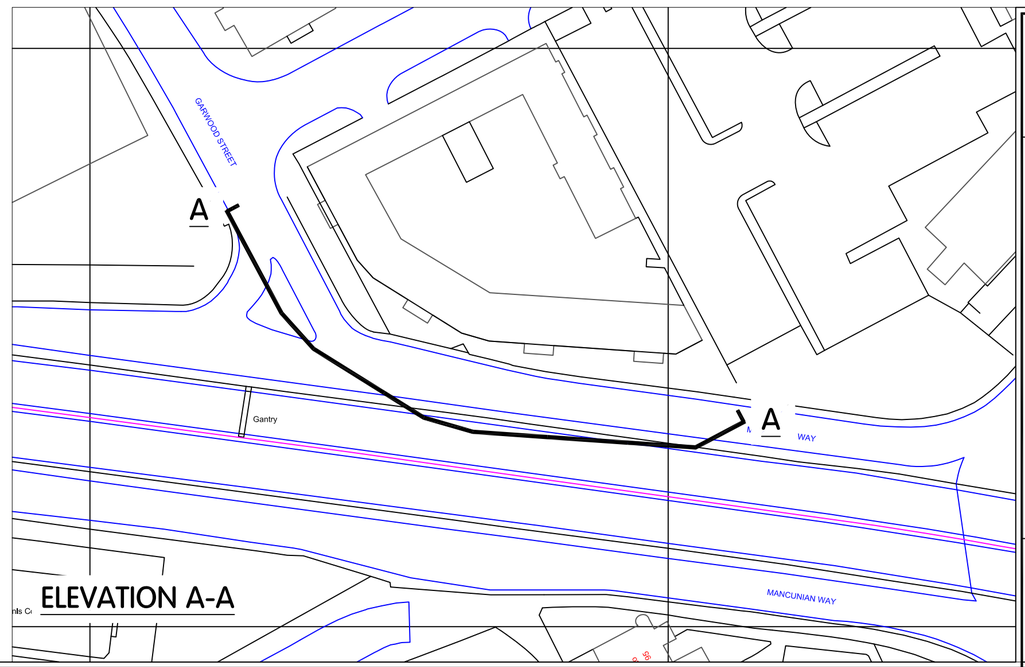

ELEVATION A-A

Drawing Notes: -

- Building dimensions taken from elevations issued for planning and checked on site.

dep LANDSCAPE ARCHITECTURE

PROJECT:
MANCUNIAN WAY, MANCHESTER

CLIENT:
VIVID OUTDOOR MEDIA

TITLE:
EXISTING ELEVATION

DRAWING NUMBER:	REVISION:	DATE:
11_061_06	_	19/02/2013

SCALE:	DRAWN BY:
1:200 @ A2 (1:400@A3)	CP

DEP Landscape Architecture
Landscape Design and Landscape Planning Consultants
Landmark House, Cheadle Hulme, SK8 7BS
T +44 (0)161 241 9878
E info@dep.co.uk
W www.dep.co.uk

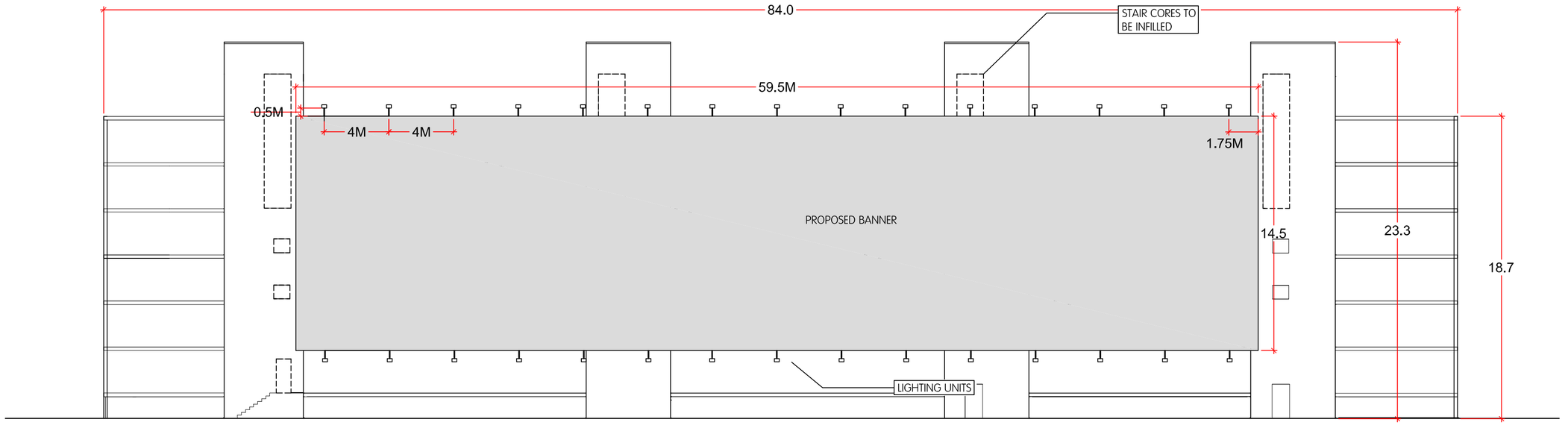

PROPOSED ELEVATION A-A

1:200

Drawing Notes: -

- Banner to be maximum 59.5m in length.
- Banner height to cover 5 storey's totaling 14.5m
- Stair core openings to structure infilled where structure is left uncovered, and painted RAL 7015 (Slate grey)
- Banner to be illuminated from top and bottom downwards from lighting rigging across the installation. See drawing 11_061_04 for details.
- Total 30 no. lighting units.
- Building dimensions taken from elevations issued for planning and checked on site.

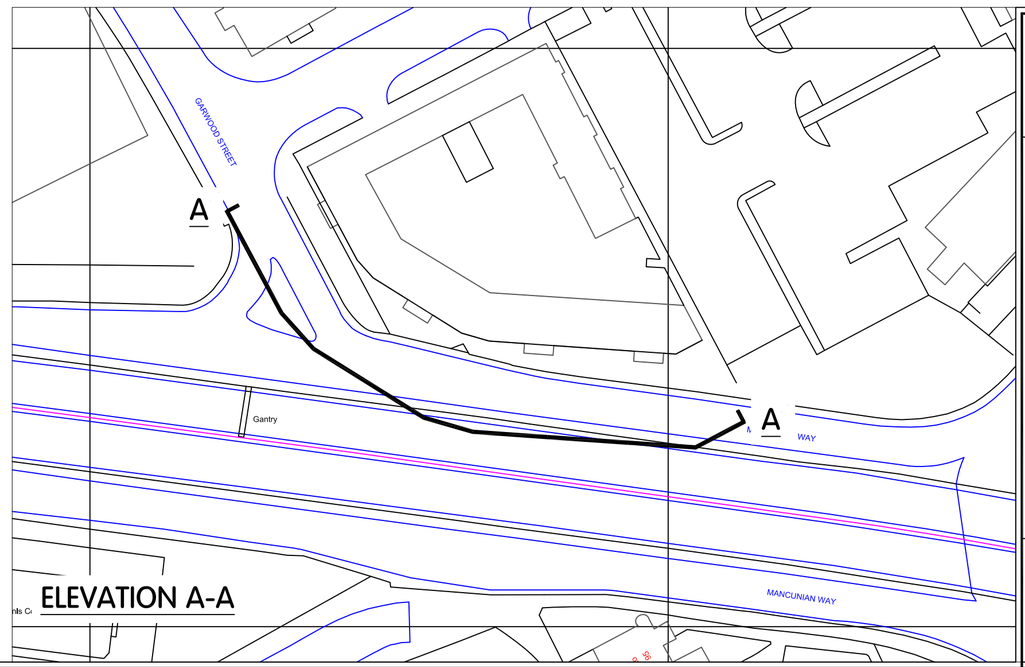

ELEVATION A-A

dep LANDSCAPE ARCHITECTURE

PROJECT:
MANCUNIAN WAY, MANCHESTER

CLIENT:
VIVID OUTDOOR MEDIA

TITLE:
PROPOSED BANNER ELEVATION ON EXISTING STRUCTURE

DRAWING NUMBER:	REVISION:	DATE:
11_061_07	_	19/02/2013

SCALE:	DRAWN BY:
1:200 @ A2 (1:400@A3)	CP

DEP Landscape Architecture
Landscape Design and Landscape Planning Consultants
Landmark House, Cheadle Hulme, SK8 7BS
T +44 (0)161 241 9878
E info@dep.co.uk
W www.dep.co.uk