**Following information is only for EU-member states:**

The use of this symbol indicates that this product may not be treated as household waste. By ensuring this product is disposed of correctly, you will help prevent potential negative consequences for the environment and human health, which could otherwise be caused by inappropriate waste handling of this product. For more detailed information about recycling of this product, please contact your local council, your household waste disposal service or the shop where you purchased the product.

©Tansun Limited 2012 Part No. 042221 Issue. 3b

TANSUN QUARTZHEAT

## Reference Manual

# Sorrento IP Double

**UK & EUROPEAN MODELS:**
**SOR 210IPD, SOR 210IPD UK, SOR 210IPD EU,**
**SOR 215IPD, SOR 215IPD UK, SOR 215IPD EU,**
**SOR 220IPD, SOR 220IPD UK, SOR 220IPD EU.**

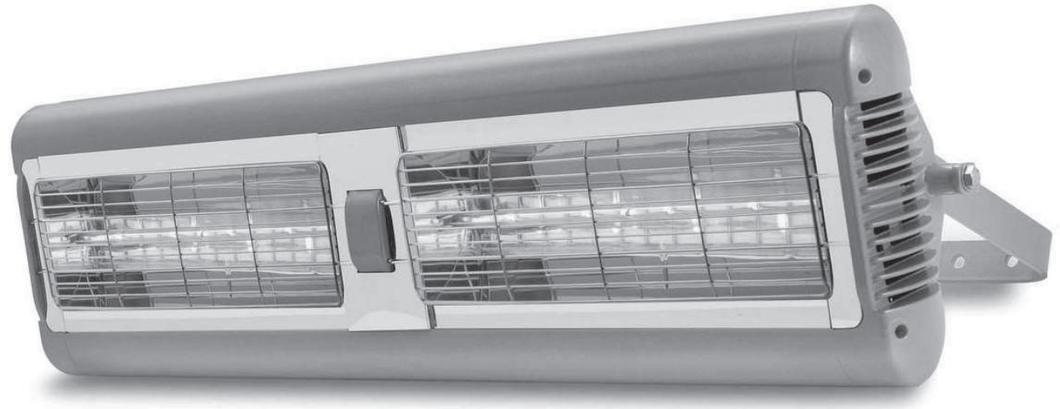

TANSUN LIMITED
Spectrum House, Unit 1 Ridgacre Road,
West Bromwich, West Midlands, B71 1BW, England.
Tel: +44 (0)121 580 6200 - Fax: +44 (0)121 580 6222
Email: quartzinfo@tansun.com - Website: www.tansun.com

## Introduction

The Sorrento IP Double heater produces radiant heat like the sun, warming people and objects rather than the air in between. It is mounted on an adjustable bracket that allows the heat to be directed exactly where it is required. Its attractive, lightweight design means that it is effective yet unobtrusive. The Sorrento IP Double heater is designed for indoor and outdoor use so is therefore weatherproof.

**Please read the following instructions carefully before use. The safety of this heater is guaranteed only by its correct usage in accordance with these instructions, therefore it is recommended that they are retained for future reference.**

## Caution

- Before using this appliance:
  - Check that the voltage indicated on the type plate corresponds to the mains supply voltage.
  - Ensure that the heater has been securely fastened in its final mounting position.
- Do not locate the heater immediately below a socket outlet.
- Remove the plug from the mains socket (or disconnect pole switch) during installation, cleaning and/or replacing the emitter and always ensure that the emitter is cool.
- Do not handle the quartz emitter with bare hands. If it is inadvertently touched, remove finger marks with a soft cloth and methylated spirit or rubbing alcohol. Otherwise, the marks will burn into the quartz glass causing premature heater failure.
- Do not use an extension cable with this product.
- Keep the mains cable away from the body of the heater which will get hot during use.
- Do not cover or obstruct the heater while it is in use.
- This appliance is not intended for use by persons (including children) with reduced physical, sensory or mental capabilities, or lack of experience and knowledge, unless they have been given supervision or instruction concerning use of the appliance by a person responsible for their safety. Children should be supervised to ensure that they do not play with the appliance.
- Do not insert any object through any slot or opening in the heater.
- Do not use if guard is not present.
- Do not install less than the minimum mounting distance from the floor.
- Do not use the heater in a bathroom.
- Warning - this appliance must be connected to a supply that is earthed! ⏚





## WARNING: Risk of Fire

Keep combustible materials such as furniture, papers, clothes and curtains at least 1.8m (6 feet) from the front of the heater and away from the sides and rear. If the heater is to be used outside, we recommend that a waterproof or indoor socket is used.

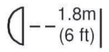


## Specification

### Table 1. UK and European Heaters

| *No. of Units* x Model Type | Voltage (Volts) | *No. of Emitters* x Power (Watts) | Total Power (Watts) | Current (A) per emitter | Total Current (A) of unit | Min. height from floor (m) | Min. dist. from ceiling (m) | Min. dist. from side wall (m) | Dimensions (inc. bracket & bars max. pos.) W x H x D (mm) | Weight (kg) | Ingress Protection (IP) |
|---|---|---|---|---|---|---|---|---|---|---|---|
| ***1 x*** SOR 210IPD | 230 | ***2 x*** 1000 | 2000 | 4.3 | 8.7 | 2.5 | 0.5 | 1.0 | 790 x 228 x 323 | 5.6 | IP24 |
| ***1 x*** SOR 215IPD | 230 | ***2 x*** 1500 | 3000 | 6.5 | 13.0 | 3.0 | 0.5 | 1.0 | 790 x 228 x 323 | 5.6 | IP24 |
| ***1 x*** SOR 220IPD | 230 | ***2 x*** 2000 | 4000 | 8.7 | 17.4 | 3.5 | 0.5 | 1.0 | 790 x 228 x 323 | 5.6 | IP24 |
| ***2 x*** SOR 210IPD | 230 | ***4 x*** 1000 | 4000 | 4.3 | 17.4 | 3.5 | 0.5 | 1.0 | 790 x 460 x 142 | 11.2 | IP24 |
| ***2 x*** SOR 215IPD | 230 | ***4 x*** 1500 | 6000 | 6.5 | 26.1 | 4.5 | 0.5 | 1.5 | 790 x 460 x 142 | 11.2 | IP24 |
| ***2 x*** SOR 220IPD | 230 | ***4 x*** 2000 | 8000 | 8.7 | 34.8 | 4.7 | 0.5 | 1.5 | 790 x 460 x 142 | 11.2 | IP24 |
| ***3 x*** SOR 210IPD | 230 | ***6 x*** 1000 | 6000 | 4.3 | 26.1 | 4.5 | 0.5 | 1.5 | 790 x 693 x 142 | 16.8 | IP24 |
| ***3 x*** SOR 215IPD | 230 | ***6 x*** 1500 | 9000 | 6.5 | 39.1 | 5.0 | 0.5 | 1.5 | 790 x 693 x 142 | 16.8 | IP24 |
| ***3 x*** SOR 220IPD | 230 | ***6 x*** 2000 | 12000 | 8.7 | 52.2 | 5.0 | 0.5 | 1.5 | 790 x 693 x 142 | 16.8 | IP24 |

Use MCB Type 3.

## Configurations

The Sorrento IP Double heater is a single unit that contains two emitters. It can be installed as an individual unit or joined to one or two more single units. It is supplied with joining bars that connect the heaters together to increase the size and output of the installation. The maximum number of individual units that can be joined together is three (long joining bars required – available separately). Please read the section 'joining individual heaters together' for information on how this should be done.

## Installation - All Configurations

- Warning - this appliance must be connected to an earthed supply.
- The wired versions (210/UK, 210/EU, 215/UK, 215/EU, 220UK & 220EU) are fitted with 5.0 metres of supply cable and a moulded plug, therefore it is unnecessary to remove the terminal box in order to carry out normal installation of these models.
- All unwired versions (210, 215 & 220) should be installed by a suitably qualified electrician, following the instructions below.
- All installations must be in accordance with the latest I.E.E safety regulations or equivalent.
- We recommend using a RCD where applicable.
- If self wiring, a large double pole switch with a 3.0mm contact disconnection should be fitted.
- If the supply cord becomes damaged, it must be replaced by the manufacturer, its service agent or a similar qualified person in order to avoid a hazard.
- Please observe the minimum safe distance between the heater body and any inflammable surfaces.



8. Remove the screws from both sides of the middle reflector and lift it up to remove it (Fig. N).

9. The emitter can be released from the middle emitter holder by prising back the spring clip and lifting up enough to clear the released clip as shown in Fig. P.

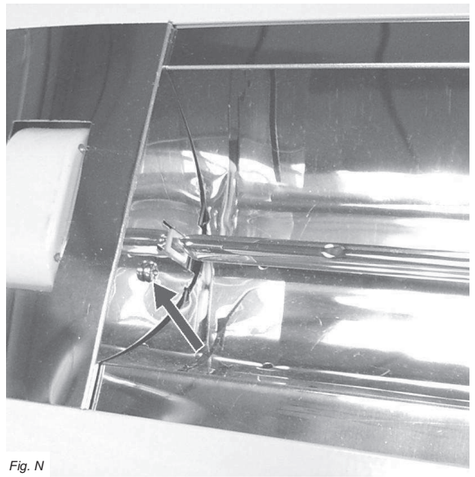

*Fig. N*

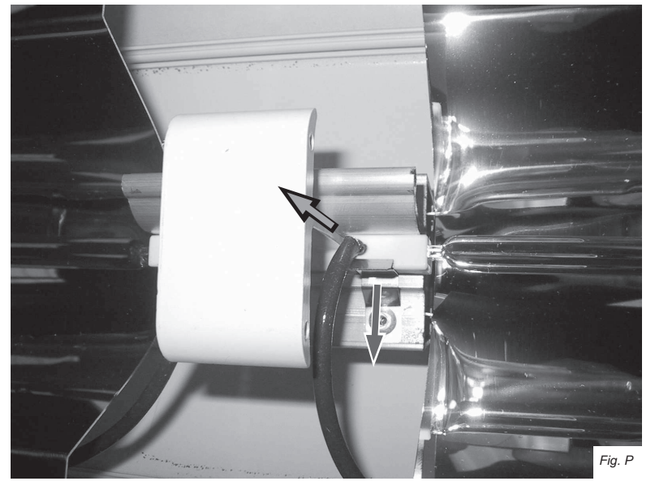

*Fig. P*

10. At the opposite end of the emitter the wire should be pulled out of the side slot and the emitter can be lifted up completely (Fig. Q). The wires should be gently pulled so they come out from behind the reflector.

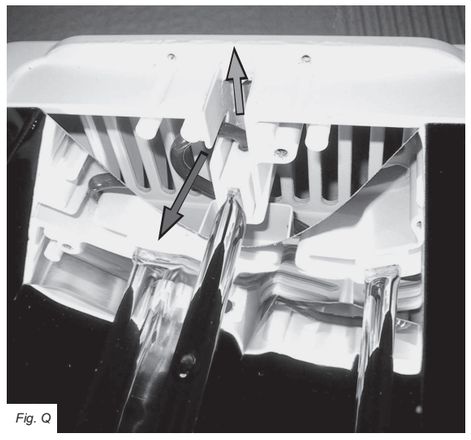

*Fig. Q*

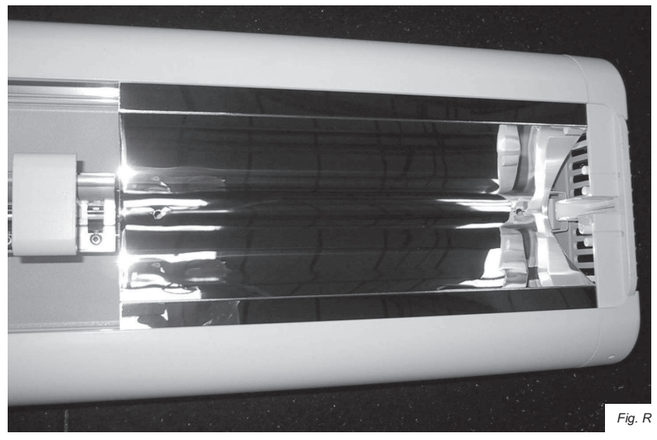

*Fig. R*

11. The emitter should now be removed from the heater as shown in Fig. R.

12. Refit new emitter(s) in reverse order ensuring that no wires get trapped and all screws are fully tightened.

## Replacing the Emitter

**If you are in any doubt about following the procedure below, please contact us for technical assistance. The mains power should be disconnected before any attempts are made to replace the emitter. The following should be carried out with compliance to the latest IEE regulations. If you are unfamiliar with installing such fixtures, contact a qualified electrician to carry out. Please read the notes on page 5 with regards to handling and buying a replacement emitter before proceeding.**

1. Ensure the heater and emitter are cool and the power supply is disconnected by removing the plugs from the socket outlet - both plugs must be removed even if only one emitter is to be replaced.

2. Remove the screws from the terminal box at the back of the emitter you wish to replace and lift off the lid - see Fig. G.



*Fig. G*

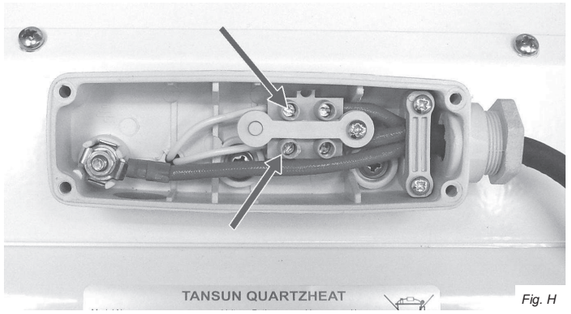

*Fig. H*

3. Disconnect the emitter from the connector blocks by unscrewing the screws highlighted above in Fig. H and remove the white coloured emitter wires from the terminal block.

4. At the back of the heater, remove the plate holding the terminal box by removing the two fixing screws as shown in Fig. J.

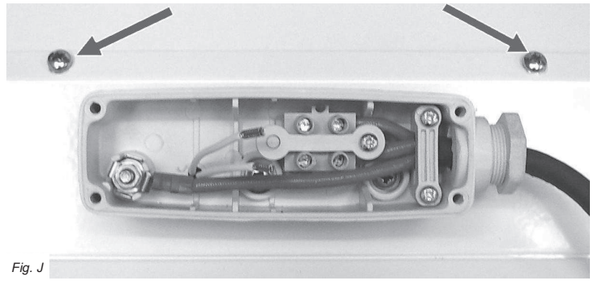
*Fig. J*

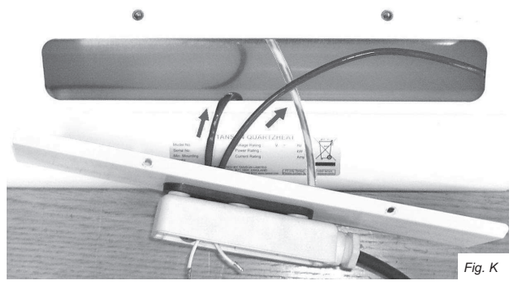
*Fig. K*

5. Pull the emitter wires one at a time through the plate to remove as shown in Fig. K.

6. At the front of the heater, the guard in front of the emitter you are replacing should be removed by gently pulling it away from the heater so it prises out of its locating holes at each end (Fig. L).

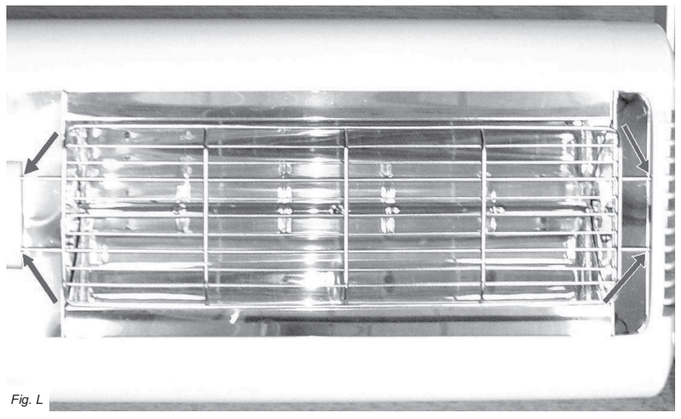
*Fig. L*

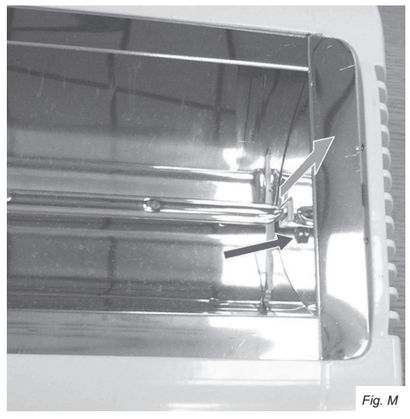
*Fig. M*

7. Remove the screw (Fig. M) from the side reflector and lift it up away from the heater to remove it.



- When the electrical connection is outside, it is recommended that a waterproof socket is used for the connection/terminal. Otherwise, the plug should be connected to a socket indoors.
- If in any doubt, please contact a suitably qualified electrician.

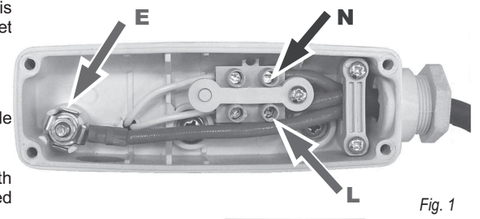

*Fig. 1*

1. Unscrew the terminal box cover at the back of the heater and feed the supply cable through the compression gland ensuring the rubber seal is on the cable.

2. Use a minimum of 1.0mm$^2$ H05RN-F supply cable with 2 poles and earth and sleeve with silicon glass fibre braided (250°C) Sleeving. The live and neutral wires must be connected to the terminal block. See Fig 1.

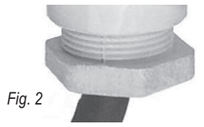
*Fig. 2*

3. The green/yellow wire should be connected to the clamp marked with the earth symbol using a suitable wire terminal. Fit cord grip and terminal box saddle once wired.

4. Tighten the barrel nut of the compression gland so that the rubber seal grips the cable (Fig 2).

5. Ensure that the cover is secured well by hand tightening all for screws evenly to prevent water ingress.

## Mounting - Individual Unit (Wall Mounting or Chain Hanging)

- The Sorrento IP Double heater should only be wall mounted in a horizontal manner or hung from a ceiling from chains (not supplied).
- When wall mounting the Sorrento IP Double heater in a horizontal manner, do not position the heater at an angle more than 90° and less than 30° as shown in Fig. A.
- When ceiling hanging the Sorrento IP Double heater, ensure the minimum distance from the ceiling is adhered to as shown in Fig. B.
- Always allow the heater to cool before attempting to reposition/move. Never attempt to move the heater while it is switched on!
- Observe the minimum safe distance between the heater body and inflammable surfaces and objects when mounting.
- Please refer to Table 1 for the recommended positioning of the heater with regards to minimum distances. Do not install the heater in a corner!
- Keep out of the reach of children.

*Fig. A*

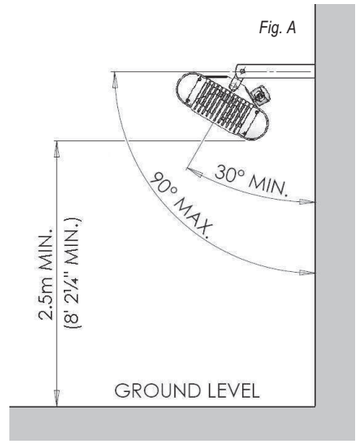


1. When wall mounting, securely fasten the L-shaped wall brackets to the mounting surface using both of the fixing holes in the short part of the bracket (see Fig. D for mounting hole centres). Please refer to Table 1 for recommended positioning of the heater. Please note. Wall fixings are not supplied. They should be selected to substantially support the weight of the installation. If in doubt contact a professional for advice! When hanging from a ceiling two equal length and gauge chains are required and should be selected with fixings that are more than adequate to hold the weight of the heater. Again, if in doubt contact a professional for advice!
2. The heater should be mounted with the terminal box at the bottom of the heater when being wall mounted.
3. When wall mounting, fix in the required angular position by tightening the fixing bolts on the brackets at the rear of the heater as shown in Fig. C. The heater should face directly down when hanging.
4. Secure the supply cable so it is not resting on the body or obstructing the air-vents.

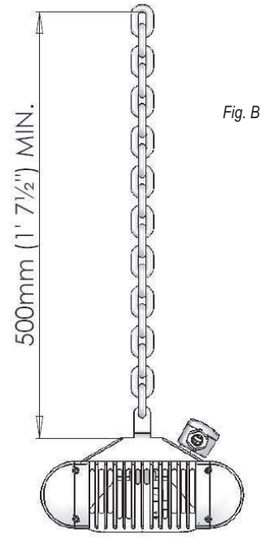

*Fig. B*

**Always isolate the heater from the mains supply when adjusting the position.**

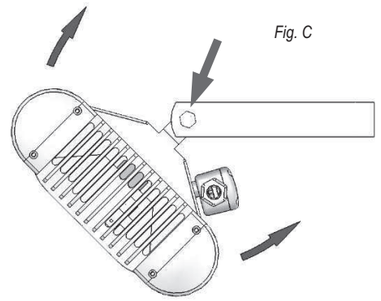
*Fig. C*

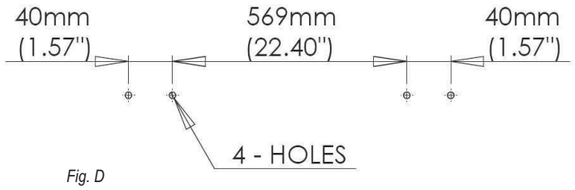

*Fig. D*

## Joining Individual Heaters Together

The Sorrento IP heater can be joined to other Sorrento IP heaters using the joining bars provided. A maximum of three individual heaters can be joined in one installation.

## Assembling - Two Individual Heaters Joined

1. Take the first heater and place it face down on a flat surface.
2. Take the second heater and place it face down and positioned parallel to the first heater.
3. Push the M8 bolts (used to hold the wall brackets through the hole in the brackets on the rear heaters and slide a shake-proof washer on all the threads from the protruding side.
4. Slide the joining bars on each bolt and fit a washer and nut – do not fully tighten at this point.
5. Ensure the second heater is still parallel to the first and sitting flat.
6. Slide the joining bars on each protruding bolt of the other heater to connect them together and fit the washers and nuts.
7. Again, ensuring the heaters remain flat, fully tighten all four nuts to secure the joining bars in place.

## Ceiling Hanging - Two Individual Heaters Joined

- When two Sorrento IP Double heaters are joined they should only be hung from a ceiling on chains - do not wall mount!
- Always allow the heater to cool before attempting to reposition/move. Never attempt to move the heater while it is switched on!
- Observe the minimum safe distance between the heater body and inflammable surfaces and objects when mounting.
- Please refer to Table 1 for the recommended positioning of the heater with regards to minimum distances. Do not install the heater in a corner!
- Keep out of the reach of children.

1. Please refer to Table 1 for recommended positioning of the heater. When hanging from a ceiling two chains of equal length and gauge are required and should be selected with fixings that are more than adequate to hold the weight of the heater. If in doubt contact a professional for advice!
2. Fix the heater assembly to the chains via the hole in the centre of the joining bar as shown in Fig. E. and ensure the heater faces directly down when hanging.
3. Secure the supply cable so it is not resting on the body or obstructing the air-vents.

   **Always isolate the heater from the mains supply when adjusting the position.**

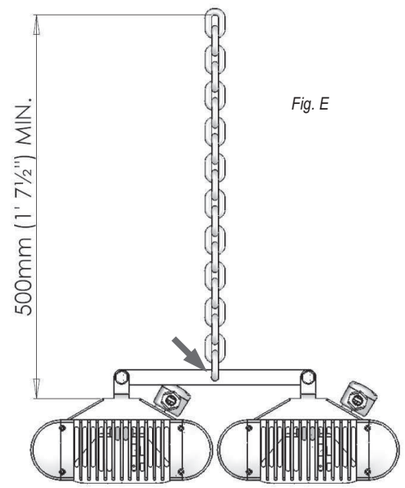


*Fig. E*

## Assembling - Three Individual Heaters Joined

1. Take the first heater and lie it face down on a flat surface.
2. Take the second and third heaters and position them face down and parallel to the first.
3. Push the M8 bolts (used to hold the wall brackets through the hole in the brackets on the rear heaters and slide a shake-proof washer on all the threads from the protruding side.
4. Slide the long joining bars (not supplied, available separately) on each bolt and fit a washer and nut – do not fully tighten at this point.
5. Position the second heater so it's parallel to the first and sitting flat.
6. Take the third heater and a joining bar. Push a bolt and washer through the end hole and place a serrated washer on the other side. Push the bolt through the bracket hole on heater. Repeat on opposite side and secure with a washer and nut – do not fully tighten at this point.
7. Position the third heater so it's parallel to the second.
8. Line-up the bars of the first heater with the brackets of the second heater – they should go on the inside faces like heater one.



9. Line-up the bars of the third heater with the brackets of the second heater – these should go on the outside faces like heater three.
10. Push a bolt from the back of the long joining bars through the holes putting a serrated washer on each side of the heater bracket.
11. Fit a washer and nut to both sides and providing the assembly is sitting flat, fully tighten both sides and also the nuts of the first and third heaters to the joining bars.
12. The heater is now ready for hanging.

## Ceiling Hanging - Three Individual Heaters Joined

- When three Sorrento IP Double heaters are joined they should only be hung from a ceiling on chains - do not wall mount!
- Always allow the heater to cool before attempting to reposition/move. Never attempt to move the heater while it is switched on!
- Observe the minimum safe distance between the heater body and inflammable surfaces and objects when mounting.
- Please refer to Table 1 for the recommended positioning of the heater with regards to minimum distances. Do not install the heater in a corner!
- Keep out of the reach of children.

1. Please refer to Table 1 for recommended positioning of the heater. When hanging from a ceiling four chains of equal length and gauge are required and should be selected with fixings that are more than adequate to hold the weight of the heater. If in doubt contact a professional for advice!
2. Fix the heater assembly to the chains via the holes in the centre of the long joining bars as shown in Fig. F. and ensure the heater faces directly down when hanging.
3. Secure the supply cable so it is not resting on the body or obstructing the air-vents.

   **Always isolate the heater from the mains supply when adjusting the position.**

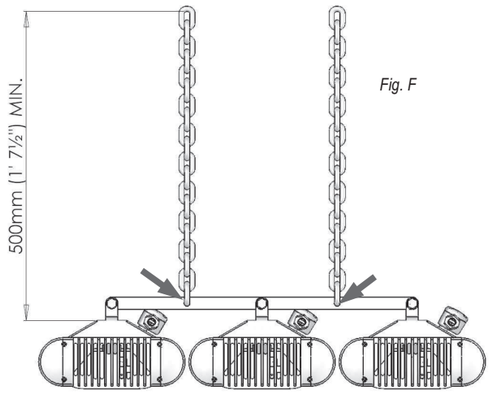


*Fig. F*

## Maintenance

**In the event of heater failure, or for spare parts or advice, please contact the manufacturer in the first instance.**

- Disconnect from the mains before commencing any maintenance procedure including cleaning.
- To ensure optimum heat effectiveness, it is recommended that that the guard is removed and the reflector is wiped with a lint-free cloth should the reflector show considerable signs of dust or dirt.

## Your Replacement Emitter

It is very important that your replacement emitter is exactly the same as the one it was supplied with. Failure to fit the exact same type could cause the heater to fail or even become dangerous especially when used in an outdoor environment.
Please contact Tansun Limited to purchase your replacement emitter and state the model number of the heater you wish to fit the emitter to.

## Handling the Replacement Emitter

Your new quartz emitter should not be handled with bare hands.
Remove finger marks with a soft cloth and methylated spirits or rubbing alcohol. Finger marks will burn into the quartz glass causing it to fail prematurely.