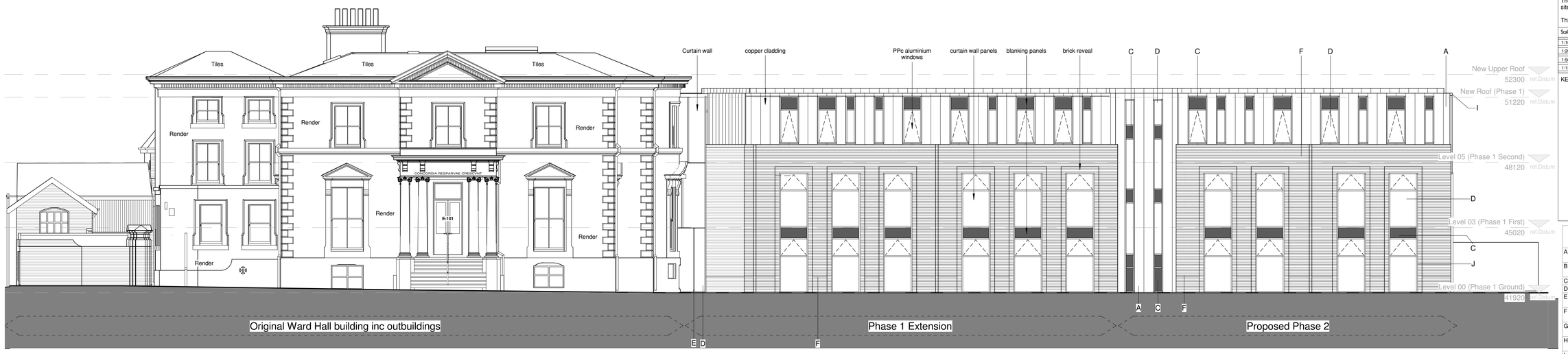

1 Phase 2 - Proposed West Elevation

1 : 100

NOTES

The Contractor is to check all dimensions and conditions on site before commencing. Do not scale from this drawing.

This drawing remains the copyright of POZZONI LLP.

Scale Bars TO BE USED ONLY AS GUIDANCE

1:100	mm	1000		3000		5000
1:200	mm		5000		6000	
1:500	M	5		15		25
1:1250	M	10	30		50	70

KEYPLAN

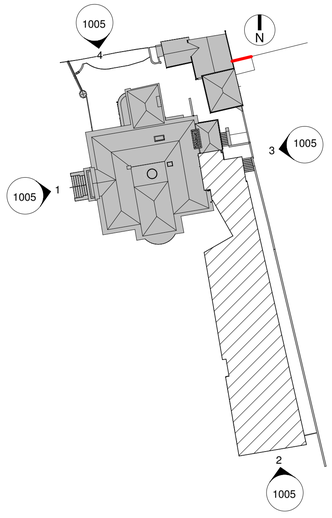

. Proposed Elevations - Key

1 : 500

Copy of Proposed Materials - Schedule

A	Copper Cladding - Nordic Brown Light (By Aurubis) NBS Spec - H73
B	PPC Aluminium Frame to Windows - Colour: 08B29
C	Opaque Glazing
D	Double Glazing
E	PPC Aluminium Frame to Curtain Walling - Colour: 08B29
F	New Brickwork - Mortar Type 1 (CEMEX Colour: Dark Brown Light)
G	New Brickwork - Mortar Type 2 (CEMEX Colour: Black Dark)
H	PPC Pressed-Metal Framing - Colour: 08B29
I	Zinc Cladding (by VmZinc) NBS Spec - H74
J	New Engineering Brickwork - Mortar Type 2 (CEMEX Colour: Black Dark)
K	



2 Phase 2 - Proposed South Extension

1 : 100



4 Copy of (jp) Phase 2 - Existing North Elevation

1 : 100

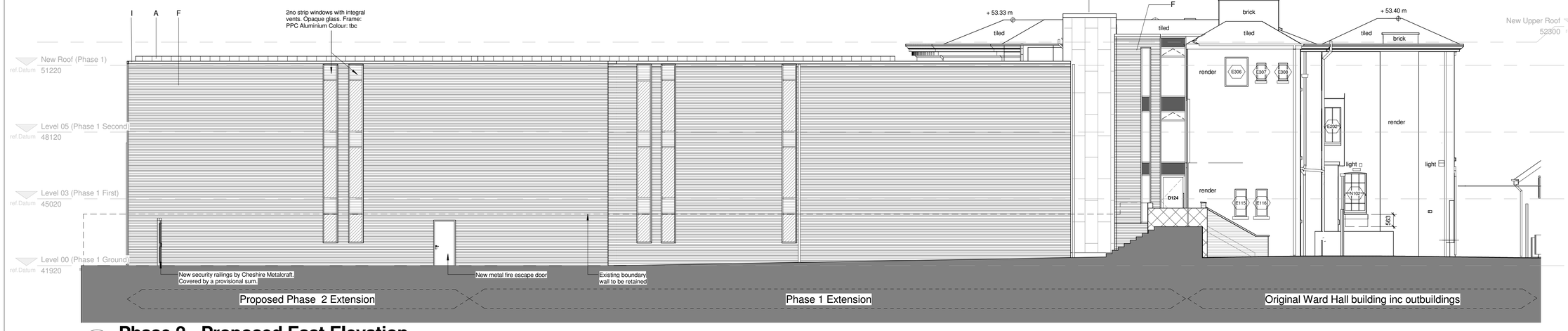

3 Phase 2 - Proposed East Elevation

1 : 100

Rev	A	Issued for Planning	JP	19.05.14
		Description	By	Date
Client	Xaverian College			
Job	Ward Hall Extension			
Drawing	Phase 2 - Proposed Elevations			
Drg No.	P3923 - 1005		Rev	A
Date	04/04/14	Scale	As indicated	@ A1
3D CoOrd	ATW	2D CoOrd	JP	Approved CSM
Project Status	Feasibility	Tender	Construction	
	Design	Contract	As Built	

POZZONI

16 Bowling Green Lane
London
EC1R 0BD

2 Woodville Road
Altrincham
WA14 2FH

020 787 0079
architects@pozzoni.co.uk

0161 928 7848
www.pozzoni.co.uk

Drawings and models powered by POZZONI BIM using AutoDesk. Revit. Contact us for details