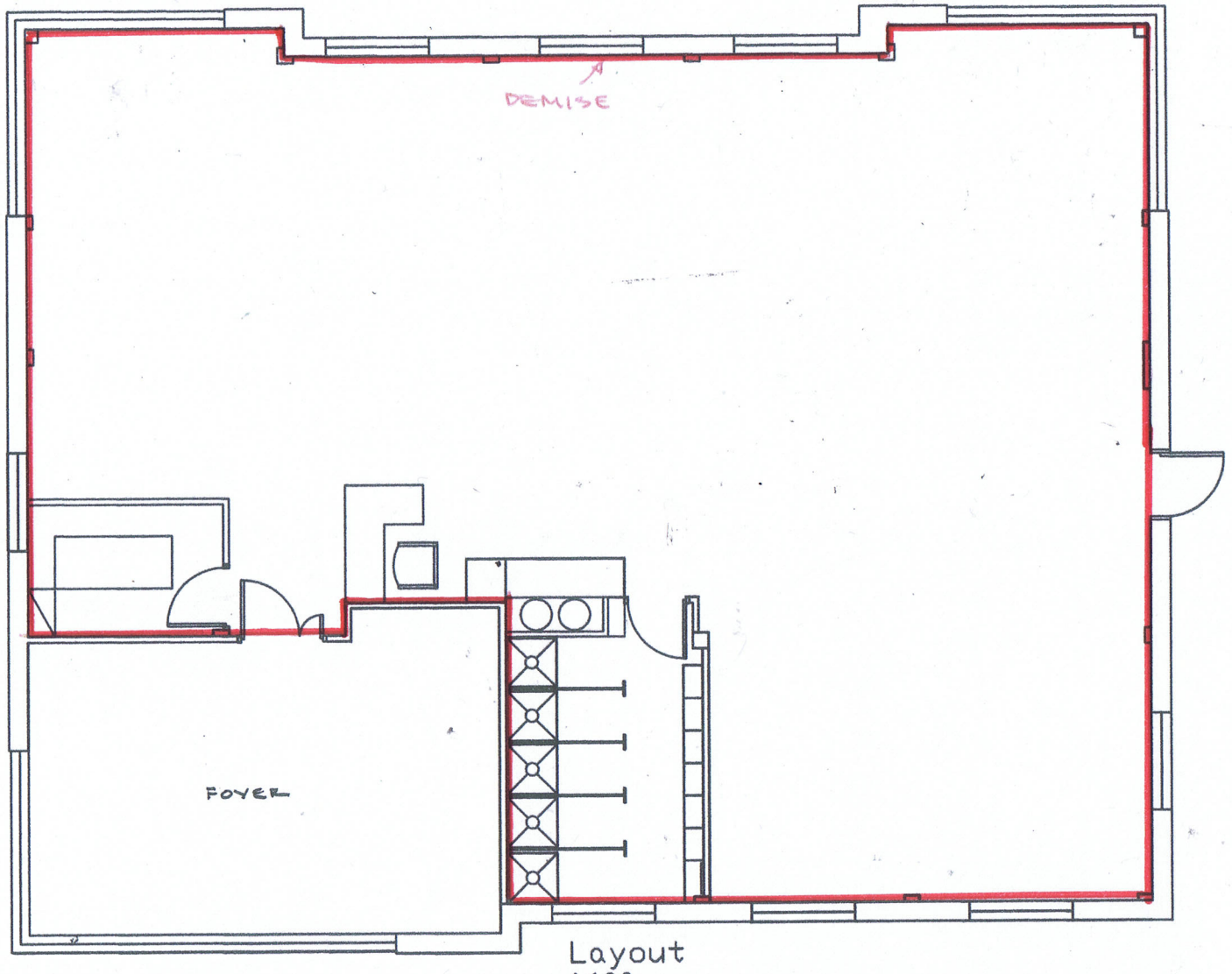

Layout
1:100

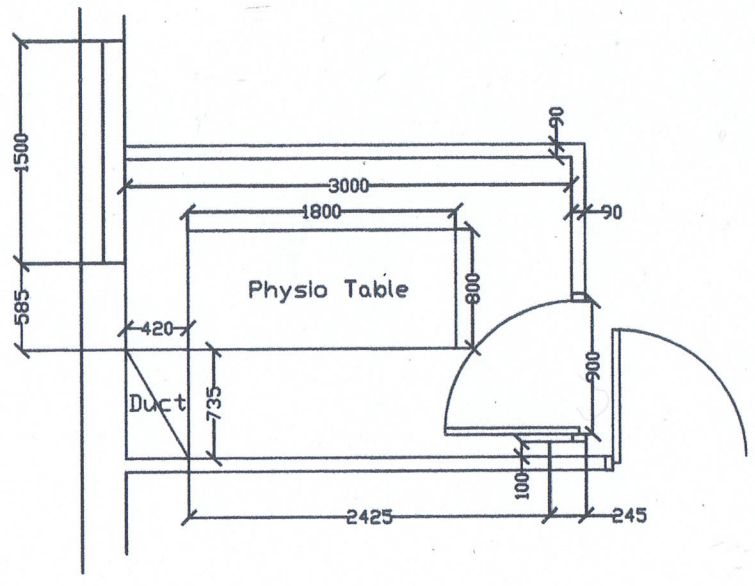

Physio Room
1:50

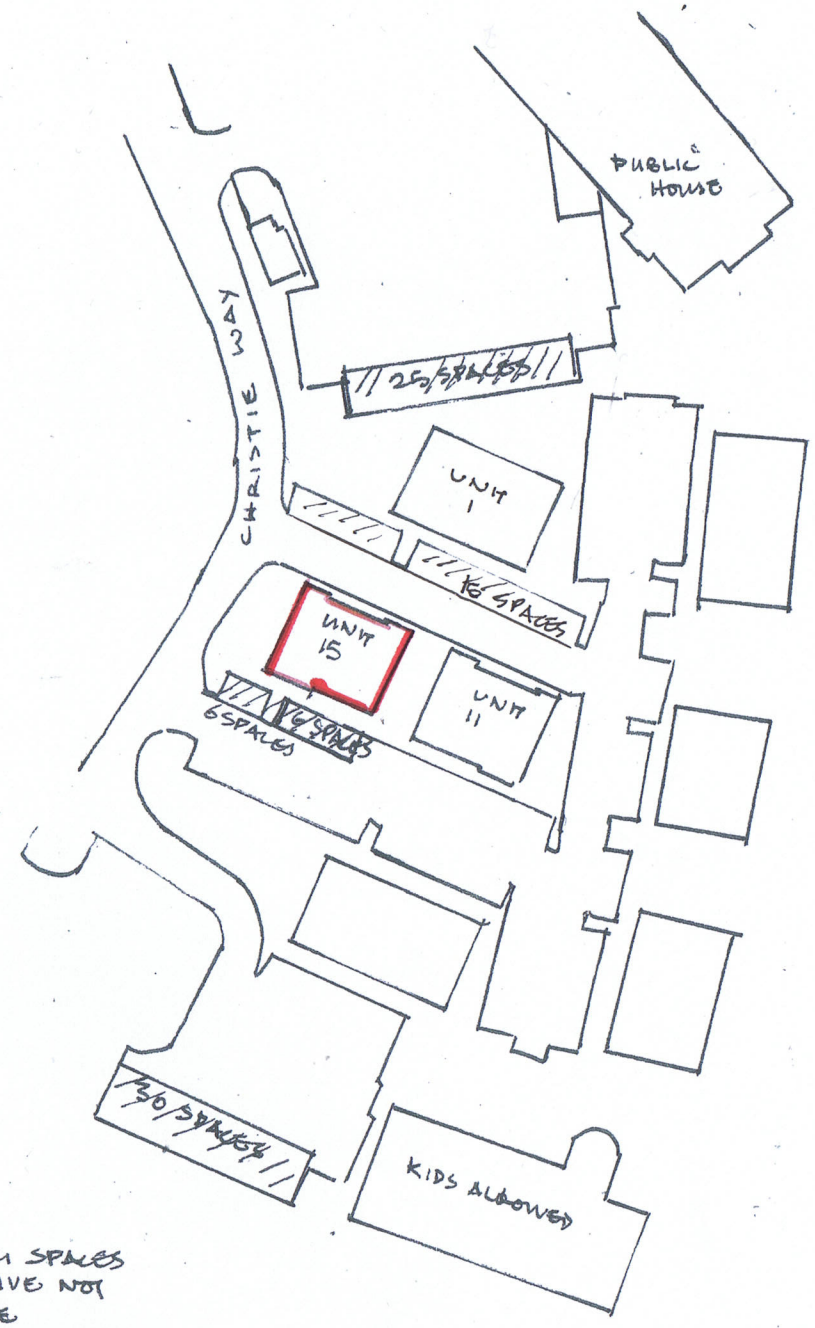

PARKING SPACES INDICATIVE NOT TO SCALE

N

LOCATION
1:1250

Christie Fields Gym
Business Homes Christie Fields Manchester
Preliminary Layout
DWG (2-) 03
Scale - 1:100 & 1:50