Sign A
2No. Double sided pictorial signs complete
with steel gibbets and illuminated by led trough lights.
Size: 900 x 1200mm. gibbet projection - 1200mm.



Sign B
1No. Set of individual locator fixed timber letters. Illuminated by led trough light.
Size: Span - 3000mm, N - 380mm, E - 290mm. Depth of letters and fixings - 37mm

NEW UNION

Sign C
1No. Set of individual locator fixed timber letters. Illuminated by led trough light.
Size: Span - 4000mm, N - 380mm, E - 290mm. Depth of letters and fixings - 37mm

NEW UNION INN

Sign D
1No. Set of individual locator fixed timber letters. Illuminated by led trough lights.
Size: Span - 2000mm, O/A Height - 1715mm, N - 475mm, E - 356mm.
Depth of letters and fixings - 37mm

NEW
UNION
INN

Sign E (scale 1:10)
10No. Low energy colour changing led floodlights
Size: 240 x 90 x 210mm

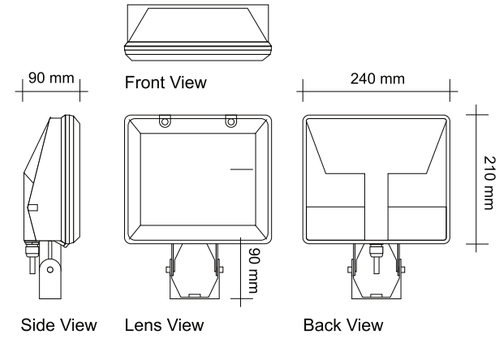

Sign F
2No. Sets of sign written lettering to render.
Size: 1200 x 1285mm

HOTEL
Rooms
CASK ALES
Warm & Friendly
WELCOME

Sign G
1No. Poster case. Illuminated
by tough light.
Size: 980 x 1680mm

Sign H
2No. Poster case. Illuminated
by tough lights.
Sign: 980 x 1980mm

Sign I
All existing lanterns to remain.



Copy Licence No. - 100048453

Scale 1:20 & 1:10 @ A3

alan@insigniasigns.biz

Marstons.
New Union Inn - Manchester.
26/03/14, 08/04/14, 11/04/14, dr.

ral 7038	black	silver	ral 5011	matt black (windows)

NB - please always refer to actual paint references for accurate colour representation

Insignia
t : 0113 243 8533 f : 0113 243 8733 / e-mail : sales@insigniasigns.biz / www.insigniasigns.biz

This document is the property of Insignia Signs who own the copyright therein. The information in this document is given in confidence and without the written permission of Insignia Signs. Given by contract or otherwise the document must not be copied reprinted or reproduced in any material form either wholly or in part nor must the contents of the document or any method or technique available therefrom be disclosed to any third party.

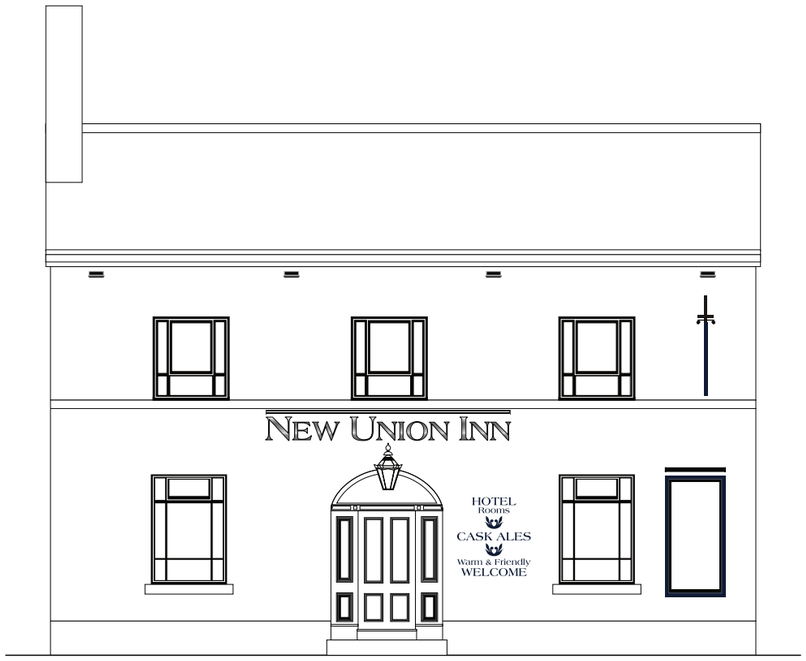

Princess Street Elevation – Scale 1:100

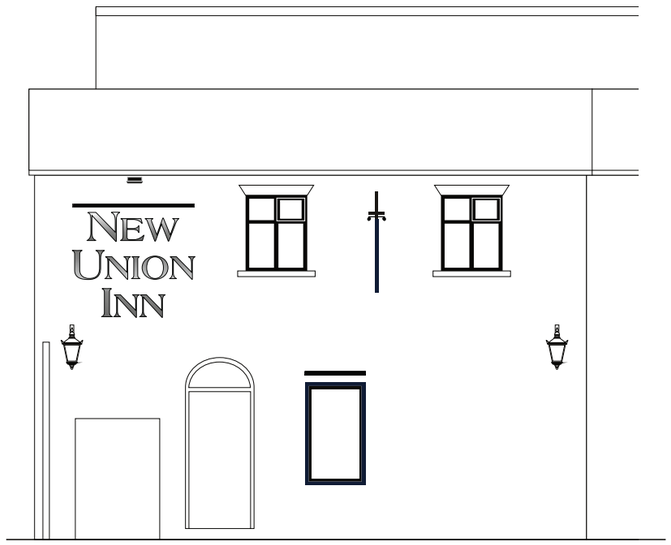

Side Elevation – Scale 1:100

0 .5 1.0 1.5 2.0 2.5 3.0 3.5 4.0 4.5 5.0
m



Canal Elevation – Scale 1:100

Copy Licence No. - 100048453

Scale 1:100 @ A3

alan@insigniasigns.biz

Marstons.
New Union Inn – Manchester.
26/03/14, 08/04/14, 11/04/14, dr.

ral 7038	black	silver	ral 5011	matt black (windows)

NB – please always refer to actual paint references for accurate colour representation

Insignia

t : 0113 243 8533 f : 0113 243 8733 / e-mail : sales@insigniasigns.biz / www.insigniasigns.biz

This document is the property of Insignia Signs who own the copyright therein. The information in this document is given in confidence and without the written permission of Insignia Signs. Given by contract or otherwise the document must not be copied reprinted or reproduced in any material form either wholly or in part nor must the contents of the document or any method or technique available therefrom be disclosed to any third party.

Scale 1:1250

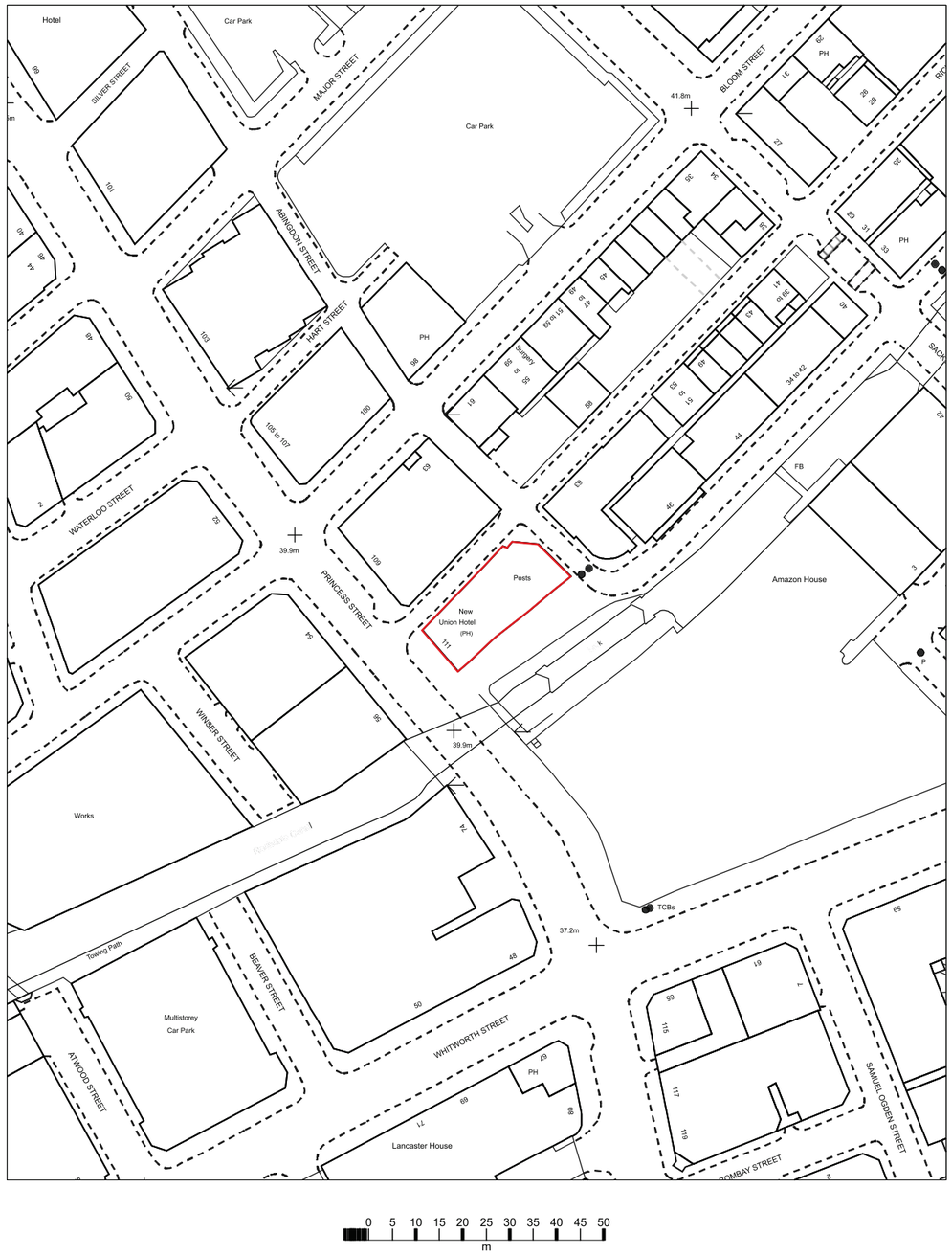

Scale 1:500

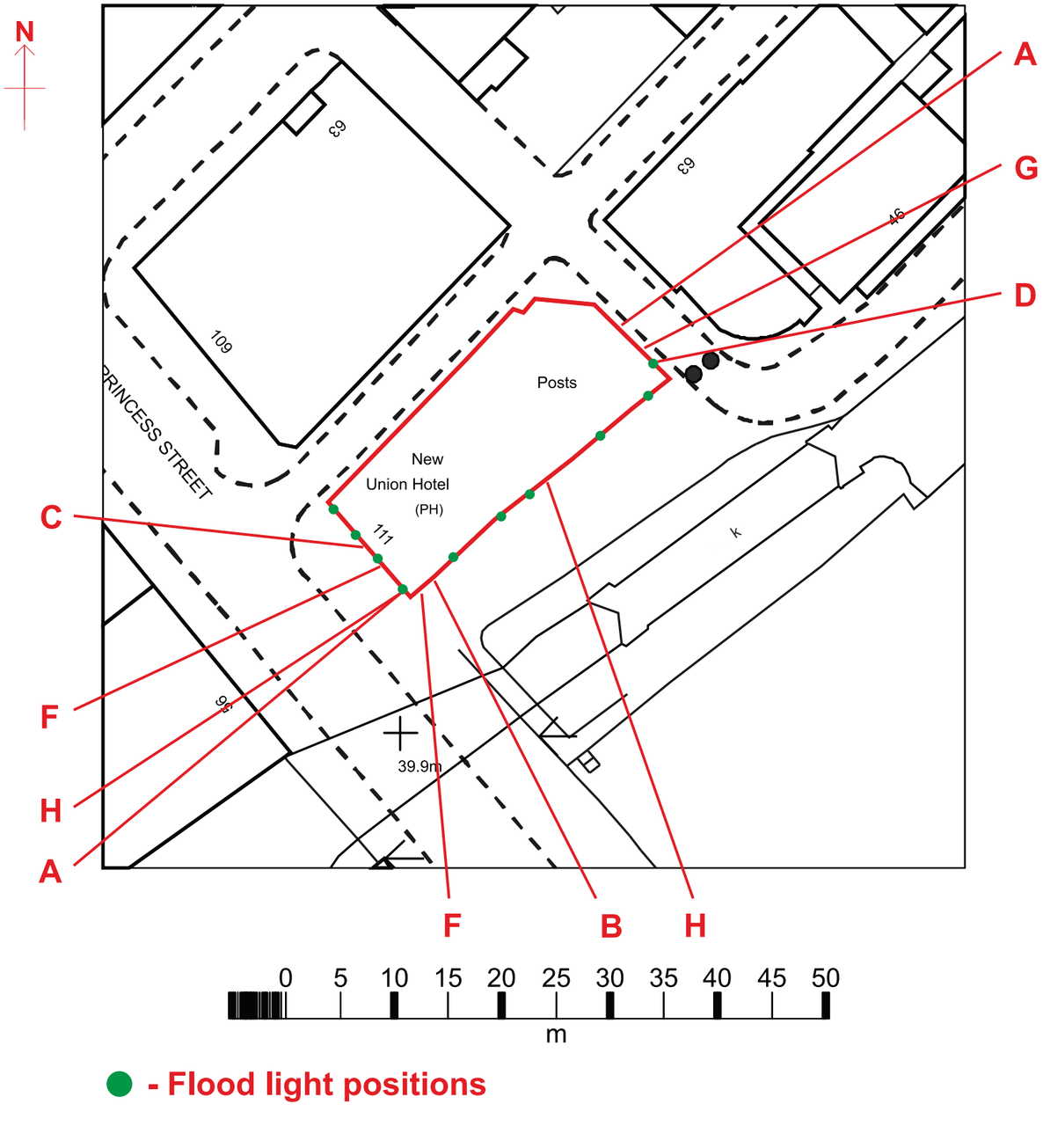

● - Flood light positions

Copy Licence No. - 100048453

Scale 1:250 & 1:500 @ A3

alan@insigniasigns.biz

Marstons.
New Union Inn – Manchester.
26/03/14, 08/04/14, 11/04/14, dr.

ral 7038	black	silver	ral 5011	matt black (windows)

NB – please always refer to actual paint references for accurate colour representation

Insignia
t : 0113 243 8533 f : 0113 243 8733 / e-mail : sales@insigniasigns.biz / www.insigniasigns.biz

This document is the property of Insignia Signs who own the copyright therein. The information in this document is given in confidence and without the written permission of Insignia Signs. Given by contract or otherwise the document must not be copied reprinted or reproduced in any material form either wholly or in part nor must the contents of the document or any method or technique available therefrom be disclosed to any third party.

SIGN A - scale 1:10

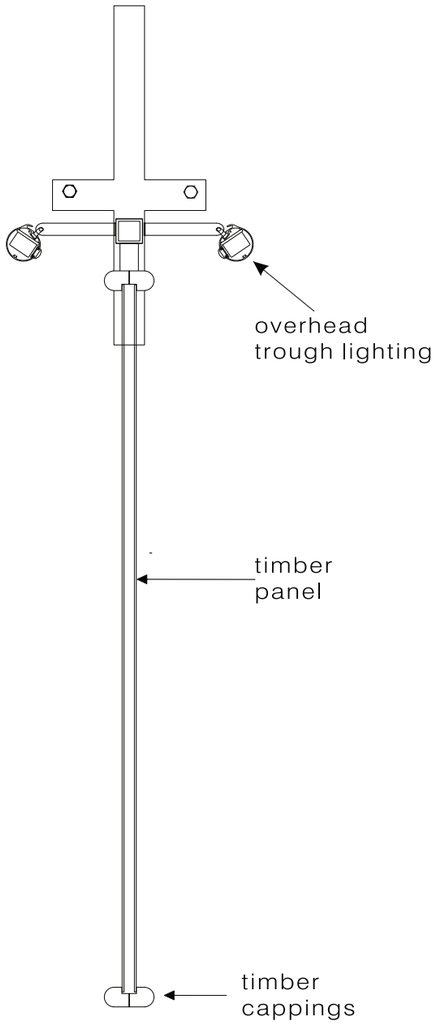

SIGNS B & C - scale 1:10

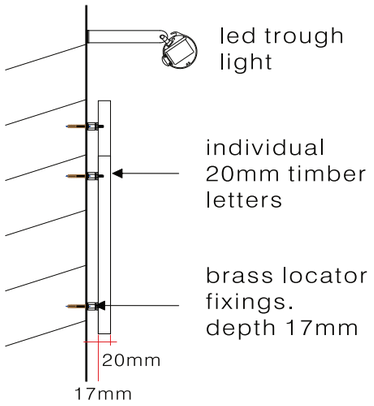

SIGN D - scale 1:10

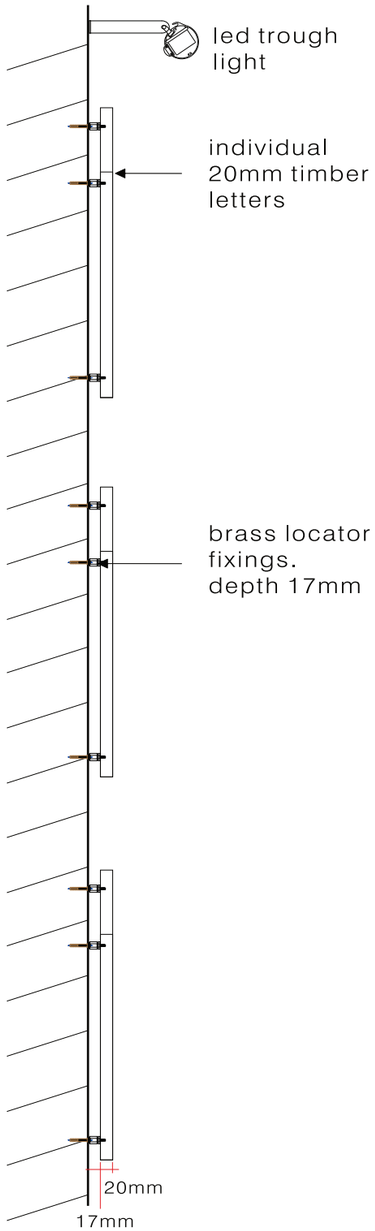

SIGN G - scale 1:10

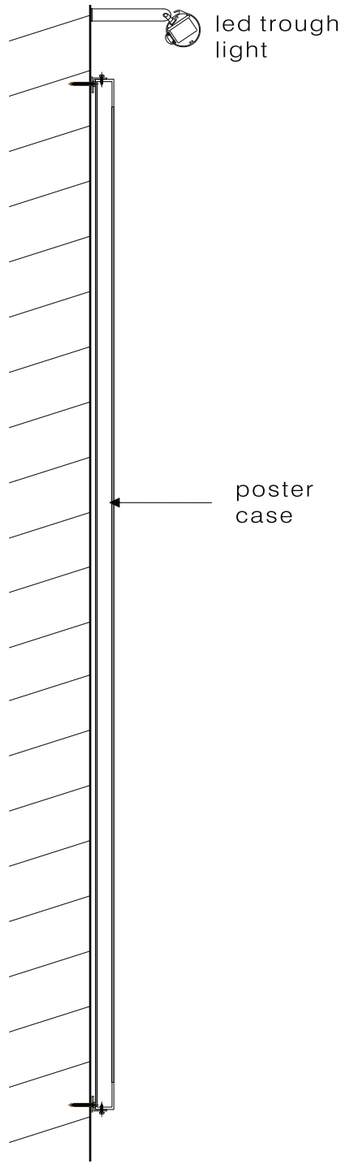

SIGN H - scale 1:10

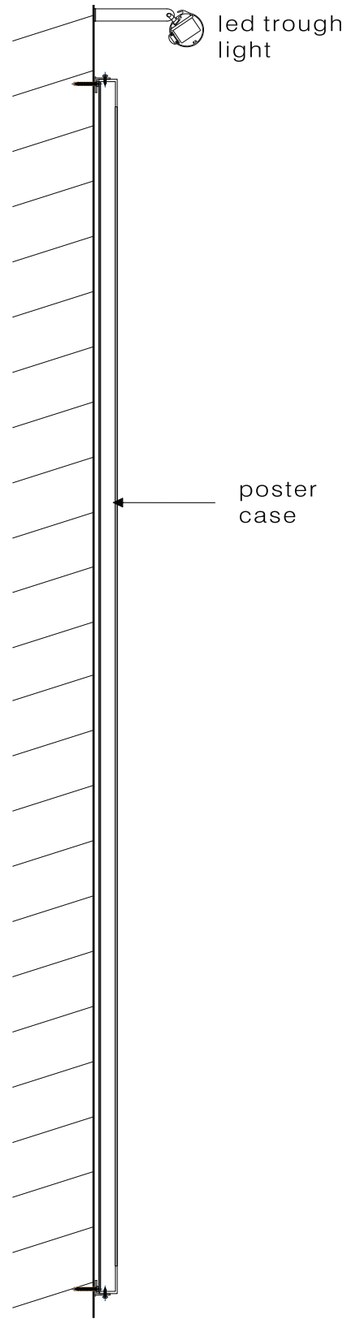

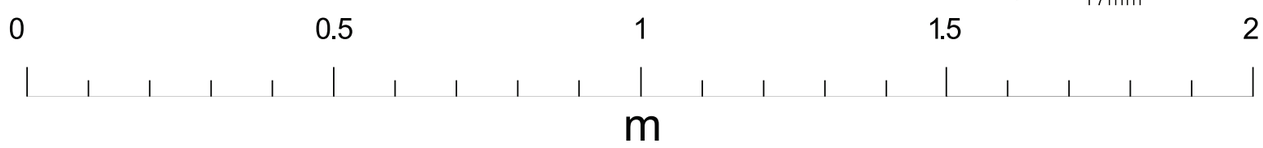

Copy Licence No. - 100048453

Scale 1:10 @ A3

alan@insigniasigns.biz

Marstons.
New Union Inn – Manchester.
26/03/14, 08/04/14, 11/04/14, dr.

ral 7038	black	silver	ral 5011	matt black (windows)

NB – please always refer to actual paint references for accurate colour representation

Insignia
t : 0113 243 8533 f : 0113 243 8733 / e-mail : sales@insigniasigns.biz / www.insigniasigns.biz

This document is the property of Insignia Signs who own the copyright therein. The information in this document is given in confidence and without the written permission of Insignia Signs. Given by contract or otherwise the document must not be copied reprinted or reproduced in any material form either wholly or in part nor must the contents of the document or any method or technique available therefrom be disclosed to any third party.