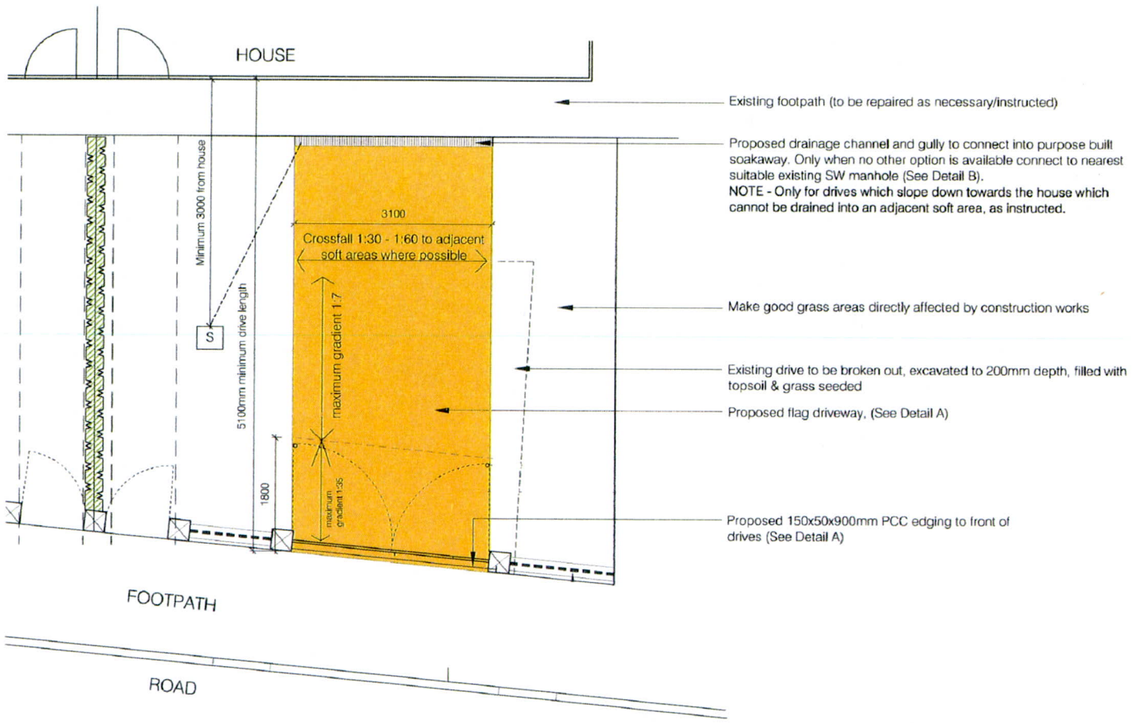

Standard Drive Detail

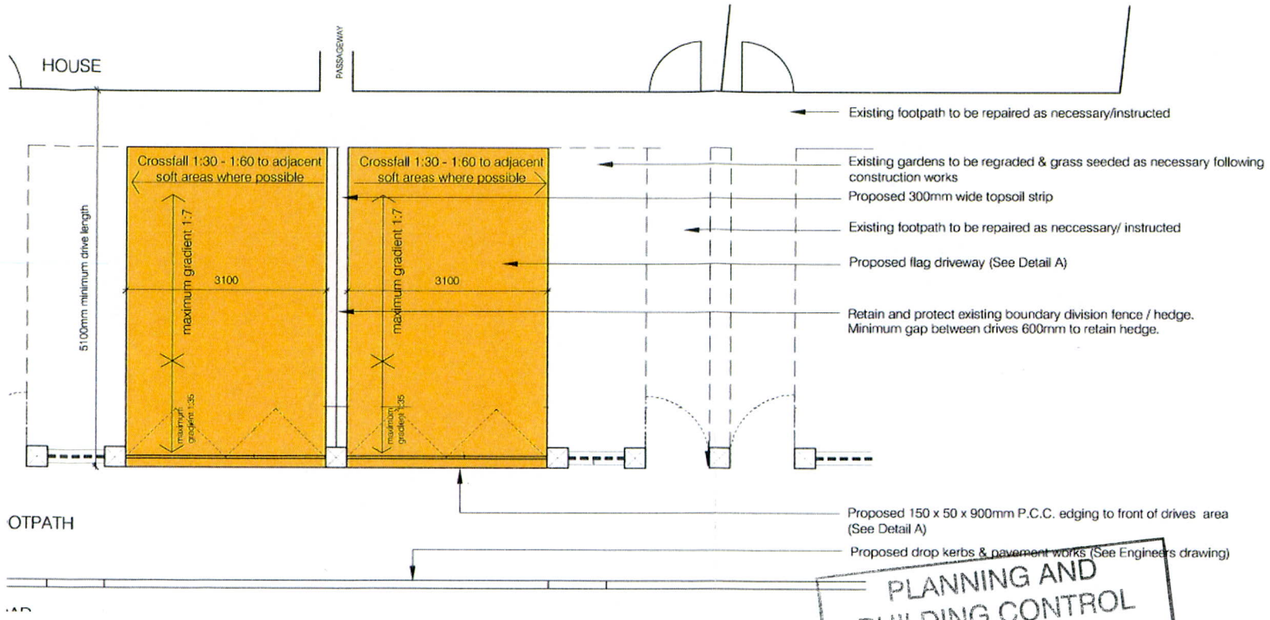

Double Drive Detail

PLANNING AND BUILDING CONTROL
14 OCT 2013

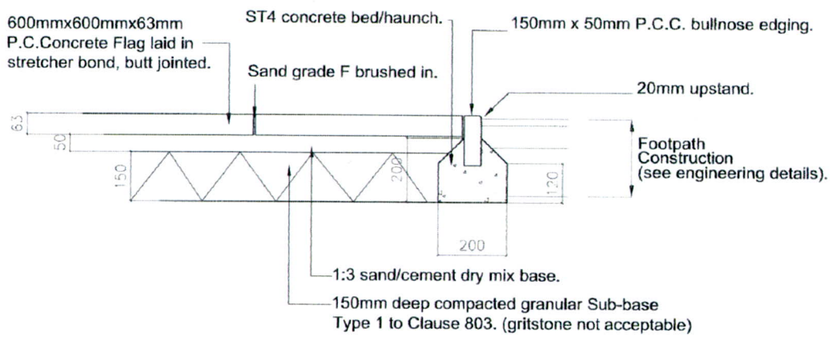

Construction Detail

1:500 Location Plan

Drives

Minimum length - 5100mm, with bifold gates which cannot be closed when drive in use (See dwg UV/001268-L-PG-B01.4)
Optimum length - 6700mm, with double leaf gates (See dwg UV/001268-L-PG-B01.3). All drives less than 6.7m long to have bifold gates.
Drive lengths - see 1:200 scale layout drawings for exact arrangements.
Drive widths - 2500mm or 3100mm - see 1:200 scale layout drawings for exact arrangements.

Steep Drives

Maximum gradient 1:7 Gradient of 1:35 required to gate opening zone unless otherwise instructed. Rising hinges only to be used in exceptional circumstances, as instructed (See dwg UV/001268-L-PG-B01.3)

Flag Drives

To be constructed in accordance with Detail A.
New & replacement p.c.c. flags to be 600 x 600 x 63mm Marshalls Standard Pimple Natural Grey flags or other & equal approved

P.c.c. Edgings

150 x 50 x 900mm pcc edgings to be laid adjacent to footway at front of each flag drive, unless otherwise instructed. 150mm nominal width Grano strip to be laid between new flag drive & existing garden path where necessary.

Gates

To be constructed in accordance with dwgs UV/001268-L-PG-B01.3/ 4

Levels

Finished levels of drives to tie in flush with existing paving adjacent to housing and existing highway footpath levels.
Grass areas to be regraded if necessary.

Grass Seeding

Pre-seeding fertilizer to be British Seed Houses Type 1, sown at a rate of 70g/m². Seed mix to be British Seed Houses A22 mix, sown at a rate of 35g/m² or other equal & approved. 150mm depth topsoil for grass areas

General Notes

BAAS Construction Ltd
The Old Chapel, Brooklands Road
Burnley, Lancs, BB11 3PR

email: build@baas.co.uk
tel: 01282 437304
fax: 01282 452200

Project	Description	Client	Drawn By	Checked by	Date
Off Street Parking Provisions	Standard Details	Southways Housing Trust	NC		10 / 10 / 13
		Scale: Not to Scale	Drawing Number: 02		