Xtratherm Limited
Kells Road
Navan
Co Meath, Ireland
Tel: 00 353 46 9066000 Fax: 00 353 46 9066090
e-mail: info@xtratherm.com
website: www.xtratherm.com

Agrément Certificate
04/4130
Product Sheet 1

XTRATHERM THIN-R INSULATION

XTRATHERM XT/TL THERMAL LINER DRY LINING SYSTEM

This Agrément Certificate Product Sheet(1) relates to Xtratherm XT/TL Thermal Liner, a rigid polyisocyanurate foam board bonded to plasterboard, for use as an insulating dry lining system for solid or cavity masonry walls and horizontal or sloped timber roof ceilings in existing and new dwellings and buildings of a similar nature.

(1) Hereinafter referred to as 'Certificate'.



CERTIFICATION INCLUDES:

- factors relating to compliance with Building Regulations where applicable
- factors relating to additional non-regulatory information where applicable
- independently verified technical specification
- assessment criteria and technical investigations
- design considerations
- installation guidance
- regular surveillance of production
- formal three-yearly review.

KEY FACTORS ASSESSED

Thermal performance — the product has a thermal conductivity (λ_D *value*) of 0.022 $W \cdot m^{-1} \cdot K^{-1}$ (see section 6).

Condensation — the insulation core has a water vapour resistivity of approximately 300 $MN \cdot s \cdot g^{-1} \cdot m^{-1}$ and each foil-facing has a high water vapour resistance of 7000 $MN \cdot s \cdot g^{-1}$. The risk of interstitial condensation will depend on the construction and should be assessed for each project (see section 7).

Behaviour in relation to fire — when properly installed, the insulation component will not contribute to the development of a fire (see section 8).

Durability — under normal conditions, the system is rot-proof, dimensionally stable and durable (see section 14).

The BBA has awarded this Certificate to the company named above for the product described herein. This product has been assessed by the BBA as being fit for its intended use provided it is installed, used and maintained as set out in this Certificate.

On behalf of the British Board of Agrément

Date of First issue: 30 September 2013

Originally certificated on 11 August 2004

John Albon — Head of Approvals
Energy and Ventilation

Claire Curtis-Thomas
Chief Executive

The BBA is a UKAS accredited certification body — Number 113. The schedule of the current scope of accreditation for product certification is available in pdf format via the UKAS link on the BBA website at www.bbacerts.co.uk

Readers are advised to check the validity and latest issue number of this Agrément Certificate by either referring to the BBA website or contacting the BBA direct.

British Board of Agrément
Bucknalls Lane
Watford
Herts WD25 9BA
tel: 01923 665300
fax: 01923 665301
e-mail: mail@bba.star.co.uk
website: www.bbacerts.co.uk

©2013

Regulations

In the opinion of the BBA, Xtratherm XT/TL Thermal Liner, if installed, used and maintained in accordance with this Certificate, will meet or contribute to meeting the relevant requirements of the following Building Regulations (the presence of a UK map indicates that the subject is related to the Building Regulations in the region or regions of the UK depicted):



The Building Regulations 2010 (England and Wales) (as amended)

Requirement:	B2	Internal fire spread (linings)
Comment:		The system is unrestricted under this Requirement. See section 8.1 of this Certificate.
Requirement:	C2(c)	Resistance to moisture
Comment:		The risk of interstitial condensation must be assessed for each construction. The product can adequately limit the risk of surface condensation. See section 7.1 of this Certificate.
Requirement:	L1(a)(i)	Conservation of fuel and power
Comment:		The product can contribute to satisfying this Requirement. See sections 6.1 and 6.2 of this Certificate.
Regulation:	7	Materials and workmanship
Comment:		The product is acceptable. See section 14 and the *Installation* part of this Certificate.
Regulation:	26	CO_2 emission rates for new buildings
Comment:		The product can contribute to satisfying this Regulation. See sections 6.1 and 6.2 of this Certificate.



The Building (Scotland) Regulations 2004 (as amended)

Regulation:	8(1)	Durability, workmanship and fitness of materials
Comment:		The product is acceptable. See section 14 and the *Installation* part of this Certificate
Regulation:	9	Building standards applicable to construction
Standard:	2.5	Internal linings
Comment:		The product is unrestricted under this Standard, with reference to clause 2.5.1[1]. See section 8.1 of this Certificate.
Standard:	3.15	Condensation
Comment:		The product can contribute to satisfying this Standard, with reference to clauses 3.15.1[1], 3.15.4[1] and 3.15.5[1]. See section 7.2 of this Certificate.
Standard:	6.1(b)	Carbon dioxide emissions
Standard:	6.2	Building insulation envelope
Comment:		The product can contribute to satisfying clauses or parts of 6.1.1[1], 6.1.2[1], 6.1.3[1], 6.1.6[1], 6.2.1[1], 6.2.3[1], 6.2.4[1], 6.2.9[1] and 6.2.11[1] of these Standards. See sections 6.1 and 6.2 of this Certificate.
Standard:	7.1(a)(b)	Statement of sustainability
Comment:		The product can contribute to satisfying the relevant requirements of Regulation 9, Standards 1 to 6, and, therefore will contribute to a construction meeting a bronze level of sustainability as defined in this Standard. In addition, the product can contribute to a construction meeting a higher level of sustainability as defined in this Standard, with reference to clauses 7.1.4[1] [Aspects 1[1] and 2[1]], 7.1.6[1] [Aspects 1[1] and 2[1]] and 7.1.7[1] [Aspect 1[1]]. See section 6.1 of this Certificate.
Regulation:	12	Building standards applicable to conversions
Comment:		Comments made in relation to the product under Regulation 9, Standards 1 to 6, also apply to this Regulation, with reference to clause 0.12.1[1] and Schedule 6[1].

(1) Technical Handbook (Domestic).



The Building Regulations (Northern Ireland) 2012

Regulation:	23	Fitness of materials and workmanship
Comment:		The product is acceptable. See section 14 and the *Installation* part of this Certificate.
Regulation:	29	Condensation
Comment:		The risk of interstitial condensation must be assessed for each construction. See section 7.1 of this Certificate.
Regulation:	34	Internal fire spread – linings
Comment:		The product is unrestricted under this Regulation. See section 8.1 of this Certificate.
Regulation:	39(a)(i)	Conservation measures
	40(2)	Target carbon dioxide emission rate
Comment:		The product can contribute to satisfying these Regulations. See sections 6.1 and 6.2 of this Certificate.

Construction (Design and Management) Regulations 2007

Construction (Design and Management) Regulations (Northern Ireland) 2007

Information in this Certificate may assist the client, CDM co-ordinator, designer and contractors to address their obligations under these Regulations.

See section: 3 *Delivery and site handling* (3.3) of this Certificate.

Additional Information

NHBC Standards 2013

NHBC accepts the use of Xtratherm XT/TL Thermal Liner, provided it is installed, used and maintained in accordance with this Certificate, in relation to *NHBC Standards*, Chapter 8.2 *Wall and ceiling finishes*.

Technical Specification

1 Description

1.1 Xtratherm XT/TL Thermal Liner comprises rigid polyisocyanurate foam, available in various thicknesses, adhered to plasterboard(1), with a composite foil/kraft paper finish on both sides. It is installed using proprietary adhesive and nailable plugs or it can be mechanically fixed on timber battens or metal furring systems (see the *Installation* part of this Certificate)

(1) manufactured in accordance with BS EN 520 : 2004, in thicknesses of 9.5 mm, 12.5 mm and 15 mm.

1.2 The boards have the nominal characteristics shown in Table 1.

Table 1 Nominal characteristics

Length (mm)	1200
Width (mm)	2438, 2400
Thickness(1) (mm)	25, 30, 38, 40, 50, 60, 80
Minimum compressive strength at 10% compression (kPa)	140
Edge profile	square and rebated

(1) Other sizes available, subject to quantity.

1.3 Ancillary items for use with this product, but outside the scope of this Certificate, are:

- timber battens
- metal furrings
- dry lining adhesive compound
- dry wall screws or plasterboard nails
- nailable plugs
- vapour control layer
- edge and corner beads
- scrim tape and joining compound or plaster for skim coat.

2 Manufacture

2.1 Raw materials are injected onto the lower foil-facer on a conveyor belt. The exothermic reaction expands the foam, which then comes into contact with the upper foil-facer. An automated process cures and cuts the product to the required size. For plasterboards, timber logs are debarked and cut into strands. After drying and screening to remove fines, the strands/flakes are blended with resin, binder and wax and formed into a three-ply mat. In the outer two layers, the strands/flakes (and woodgrain) are bound with resin and oriented in the direction of the major axis; in the core layer, the strands are in the direction of the minor axis. The panel is formed by curing the mat under pressure and temperature, and cutting to size. The plasterboard and rigid polyisocyanurate foam insulation are factory bonded using PVA adhesive.

2.2 As part of the assessment and ongoing surveillance of product quality, the BBA has:

- agreed with the manufacturer the quality control procedures and product testing to be undertaken
- assessed and agreed the quality control operated over batches of incoming materials
- monitored the production process and verified that it is in accordance with the documented process
- evaluated the process for management of nonconformities
- checked that equipment has been properly tested and calibrated
- undertaken to carry out the above measures on a regular basis through a surveillance process, to verify that the specifications and quality control operated by the manufacturer are being maintained.

2.3 The management system of Xtratherm Limited has been assessed and registered as meeting the requirements of BS EN ISO 9001 : 2008 by Loss Prevention Certification Board (Certificate 851).

3 Delivery and site handling

3.1 The product is delivered to site in polythene shrink-wrapped packs on pallets, containing a label bearing the manufacturer's trade name, product description and the BBA identification mark incorporating the number of this Certificate.

3.2 It is essential that the product is stored raised off the ground, inside or under cover, on a flat, dry, level surface in a well-ventilated area. The product must be protected from rain, snow and prolonged exposure to sunlight. Boards that have been allowed to get wet or that are damaged must not be used. Nothing should be stored on top of boards.

3.3 The product must not be exposed to a naked flame or other ignition sources, nor to solvents or other chemicals.

Assessment and Technical Investigations

The following is a summary of the assessment and technical investigations carried out on Xtratherm XT/TL Thermal Liner.

Design Considerations

4 General

4.1 Xtratherm XT/TL Thermal Liner is for use as an insulating dry lining system for solid or cavity masonry walls and horizontal or sloped timber roofs of existing and new dwellings, or buildings of a similar nature. It should be installed in accordance with the Certificate holder's instructions.

4.2 Masonry construction can include clay and calcium silicate bricks, concrete blocks and natural and reconstituted stone blocks. It is essential that such walls are constructed with regard to the local wind-driven rain index.

4.3 Walls should be designed and constructed in accordance with the relevant recommendations of:

- BS 8000-3 : 2001
- BS EN 1996-1-1 : 2005, BS EN 1996-1- 2 : 2005, BS EN 1996-2 : 2006 and BS EN 1996-3 : 2006 and their UK National Annexes.

4.4 Pitched roofs should be designed and constructed in accordance with BS 5534 : 2003 and flat roof decks in accordance with the relevant clauses of either BS 6229 : 2003 or BS 8217 : 2005 and, where appropriate, *NHBC Standards* 2013 and incorporate normal precautions against moisture ingress.

4.5 Since insulating dry linings are not intended to offer resistance to rain penetration, walls to be insulated must already be rain resistant and show no signs of rain penetration.

4.6 If present, mould or fungal growth should be treated prior to the application of the product.

4.7 It is recommended that services which penetrate the dry lining, eg light switches and power outlets, are kept to a minimum to limit damage to vapour checks.

4.8 With dry lining installations that form a void of 20 mm or more (ie timber batten systems), services can be incorporated behind the dry lining, making the chasing of the wall unnecessary. Where the services have a greater depth than the void, the wall should be chased rather than the insulation.

4.9 The installation of insulating dry lining systems requires careful detailing around doors and windows to achieve a satisfactory surface for finishing. In addition, every attempt should be made to minimise the risk of thermal bridging at reveals and where heavy separating walls are attached to the external wall. New work must be designed to accommodate the thickness of the dry lining, particularly at reveals, heads and sills and in relation to ceiling height. Where the dimensions of fixtures are critical (eg bathrooms), they should be checked before installation.

4.10 Before fixing the product, sufficient time must be allowed for the dispersion of solvents contained in some wood preservatives and damp-proofing treatments, and for any damp-proofing treatments applied to dry (see also, BS 6576 : 2005 for dry lining in conjunction with a chemical damp-proof course (dpc) application).

5 Practicability of installation

The product is designed to be installed by a competent general builder, or a contractor, experienced with this type of product.

6 Thermal performance



6.1 Calculations of thermal transmittance (U value) should be carried out in accordance with BS EN ISO 6946 : 2007 and *BRE Report BR 443 : 2006*, using the thermal conductivity (λ_D) of 0.022 $W \cdot m^{-1} \cdot K^{-1}$ for the insulation component of the dry lining and a design value of 0.21 $W \cdot m^{-1} \cdot K^{-1}$ for the plasterboard[1]. When considering insulation requirements, designers should refer to the detailed guidance contained in the documents supporting the national Building Regulations. The U values shown in Table 1 indicate that the product can contribute to a wall achieving typical design U values referred to in those supporting documents.

(1) BRE Report BR 443 : 2006.

Table 1 Wall U values

Construction U value ($W \cdot m^{-2} \cdot K^{-1}$)[1][2]	Insulation depth (mm)
0.035	50
0.030	60
0.028	65
0.027	70
0.026	70
0.025	75

(1) Assuming construction of wall (external to internal):
- 215 mm outer leaf brick (λ = 0.77 $W \cdot m^{-1} \cdot K^{-1}$)
- 25 mm air space (88.2%)/25 mm timber battens (11.8%)
- Xtratherm Insulation
- plasterboard — 12.5 mm
- plaster — 3 mm.

(2) Includes a 0.01 $W \cdot m^{-2} \cdot K^{-1}$ gap correction and also a fixing correction ≥3% (steel fixings — λ = 50 $W \cdot m^{-1} \cdot K^{-1}$, 8.33 fixings per m^2, d = 4.8 mm, and fixings fully penetrate insulation).

6.2 The product can maintain, or contribute to maintaining, continuity of thermal insulation at junctions between elements. For Accredited Construction Details, the corresponding ψ-values (psi) in *BRE Information Paper IP 1/06*, Table 3, may be used in carbon emission calculations in Scotland and Northern Ireland. Detailed guidance for other junctions and on limiting heat loss by air infiltration can be found in:

England and Wales — Approved Documents to Part L and for new thermal elements to existing buildings, Accredited Construction Details (version 1.0). See also SAP 2009 *The Government's Standard Assessment Procedure for Energy Rating of Dwellings*, Appendix K and the *iSBEM User Manual* for new-build

Scotland — Accredited Construction Details (Scotland)

Northern Ireland — Accredited Construction Details (version 1.0).

6.3 The Certificate holder has at least one member of staff who has been deemed competent by the BBA under the BBA/TIMSA Scheme for Calculation Competency (U value and Condensation Risk Analysis). Competent persons should be contacted for accurate, quality-assured U value and condensation risk analysis. The Certificate of Competency can be found on the BBA website (www.bbacerts.co.uk) as Certificate CS/1006.

7 Condensation

Surface condensation

7.1 Roofs and walls will adequately limit the risk of surface condensation when the thermal transmittance (U value) does not exceed 0.35 $W \cdot m^{-2} \cdot K^{-1}$ (roofs) and 0.7 $W \cdot m^{-2} \cdot K^{-1}$ (walls) at any point and the junctions are designed in accordance with *Limiting thermal bridging and air leakage : Robust construction details for dwellings and similar buildings* (TSO 2002), *BRE Information Paper IP 1/06* or section 6.2 of this Certificate.

7.2 Roofs and walls will adequately limit the risk of surface condensation when the thermal transmittance (U value) does not exceed 1.2 $W \cdot m^{-2} \cdot K^{-1}$ at any point. Guidance may by obtained from BS 5250 : 2011 Annexes G and H, and *BRE Report BR 262 : 2002* .

7.3 As with other types of insulation applied to the inside of a wall, there may be a risk of cold bridging from the floors or ceilings, particularly in concrete slab construction. The use of coving at the wall ceiling joint will significantly reduce this risk.

7.4 Dry lining has been used successfully in the rehabilitation of buildings suffering from surface condensation of walls where the dampness has been caused by the lack of thermal insulation.

Interstitial condensation

7.5 Walls and roofs will adequately limit the risk of interstitial condensation when they are designed and constructed in accordance with BS 5250 : 2011 Annexes D, G and H and, for roofs in England and Wales, see *BRE Report BR 262 : 2002*.

7.6 For the purposes of assessing the risk of interstitial condensation, the insulation core vapour resistivity may be taken as approximately 300 $MN \cdot s \cdot g^{-1} \cdot m^{-1}$ and 7000 $MN \cdot s \cdot g^{-1}$ for each individual foil-facing.

7.7 The water vapour resistance factors (μ) for rigid polyisocyanurate is 60 and, for plasterboard, 30 (dry) and 50 (wet), as taken from BS EN ISO 10456 : 2007, Tables 3 (plasterboard) and 4 (rigid polyisocyanurate).

7.8 To minimise moisture entering the roof, an effective vapour control layer (such as 0.25 mm minimum thickness polyethylene) should be used with sealed and lapped joints, and be turned up around the insulation and bonded to the weatherproofing finish.

8 Behaviour in relation to fire



8.1 The insulation core is combustible, but with regard to the national Building Regulations the product can be used in all situations requiring a Class 0 or 'low risk' plasterboard surface.

8.2 When properly installed, the insulation will be contained between the wall and internal lining board until one is destroyed. Therefore, the insulation component will not contribute to the development of a fire.

8.3 Any cavities formed by the product (such as those formed between the product and the substrate wall) must have appropriate fire stopping in accordance with the relevant national Building Regulations.

England and Wales — Approved Document B, Volume 1

Scotland — Mandatory Standard 2.4, clause 2.4.2[1]

(1) Technical Handbook (Domestic).

Northern Ireland — Technical Booklet E, Section 3, paragraphs 4.36 to 4.40.

9 Infestation

Use of the product does not in itself promote infestation. The creation of voids within the structure, for example gaps between the wall or roof lining and the product, may provide habitation for insects or vermin in areas already infested. Care should be taken to ensure, wherever possible, that all voids are sealed, as any infestation may be difficult to eradicate. There is no food value in the materials used.

10 Proximity of flues and appliances

When the is installed in close proximity to certain flue pipes and/or heat producing appliances, the relevant provisions of the national Building Regulations should be met:

England and Wales — Approved Document J

Scotland — Mandatory Standard 3.19, clause 3.19.1[1] to 3.19.4[1]

(1) Technical Handbook (Domestic).

Northern Ireland — Technical Booklet L.

11 Materials in contact — wiring installations

11.1 Electrical cables that are likely to come into contact with the insulation component of the thermal liner must be protected by a suitable conduit or PVC-U trunking.

11.2 As with any other form of insulation, de-rating of electrical cables should be considered where the insulation restricts the air cooling of cables.

12 Wall-mounted fittings

The recommendations of the Certificate holder should be followed. Any object fixed to the wall, other than lightweight items, eg framed pictures, should be fixed through the lining board into the wall behind, using recommended proprietary fixings. The fitting of wall mounted objects is outside the scope of this Certificate.

13 Maintenance

No routine maintenance is required for the product. If the product is damaged during use, it can be removed and replaced. However, maintenance will destroy decorative finishes locally. Sufficient material will have to be removed to reveal timber battens, and extra battens should be installed onto which the repair section can be fixed.

14 Durability



The durability of the materials is satisfactory. Provided the product is fixed to satisfactory, stable and durable backgrounds by competent builders, the product will have a life equal to the building in which it is installed. Under normal conditions of occupancy it is unlikely to suffer damage, but if damage does occur, repairs can be carried out.

Installation

15 General

15.1 It is recommended that Xtratherm XT/TL Thermal Liner boards are installed by trained dry lining operatives.

15.2 Installation should be in accordance with BS 8212 : 1995, good dry lining practice and the Certificate holder's instructions. Good workmanship and appropriate site procedures are necessary to achieve the expected thermal and air tightness performance.

15.3 Any penetrations through the product should be sealed to prevent air leakage.

15.4 When installed onto a wall, an expansion joint must be left at the top and bottom of the wall. This position should be marked on the wall.

15.5 Damaged boards can easily be replaced prior to the installation of counter battens.

16 Procedure

16.1 The product can be installed mechanically or adhesively.

Adhesive dab installation (with additional mechanical fixings)

16.2 Adhesive dabs should be applied to the wall, ensuring a 50 mm ribbon top and bottom. Dabs should be applied in accordance with BS 8212 : 1995 and BS 8000-8 : 1994.

Figure 1 Adhesive dab installation

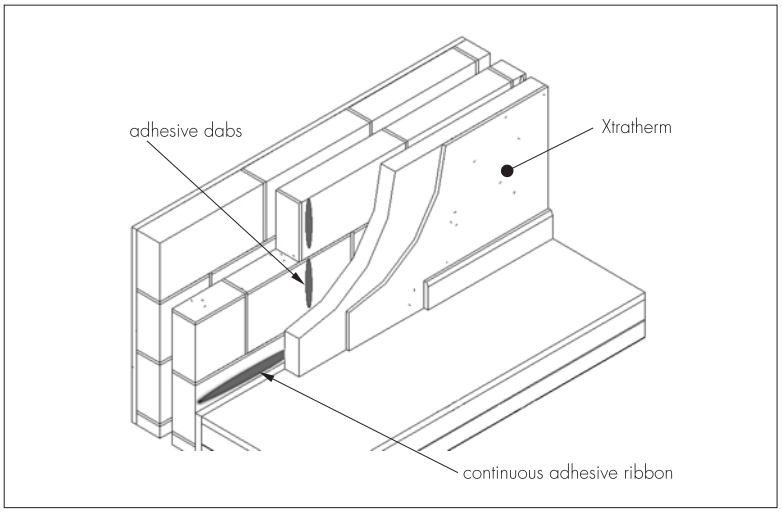

16.3 The board is placed onto the wall and positioned using wedges. Pressure is applied to level the board until it is firmly embedded into the adhesive.

16.4 A minimum of three metal fixings should be provided for each board, applied after the adhesive is set, in accordance with BS 8212 : 1995 and the Certificate holder's instructions.

Mechanically fixed directly to wall

16.5 The board should be cut approximately 15 mm short of the floor to ceiling height and positioned with the bottom edge resting on packing strips. The boards are placed into position, and alignment checked with the chalk lines on the floor and ceiling.

16.6 Once positioned, the board should be lifted to the ceiling edge using a floor lifter and supported with additional packing at the base of the board. The board should be fixed to the wall using suitable stainless steel mechanical fixings at 300 mm centres from the vertical and horizontal board edges, with a minimum of 12 fixings per board.

16.7 Other boards should be installed closely butted together using the same technique.

Adhesive dabs and batten installation

16.8 Pre-treated timber battens are fixed horizontally at ceiling level and 20 mm above the finished floor level.

16.9 Where necessary, the insulation component should be cut back at the top and bottom of the board to accommodate the timber battens. The insulation should also be cut back at external corners to accommodate adjoining panels.

Figure 2 Adhesive dabs and batten installation

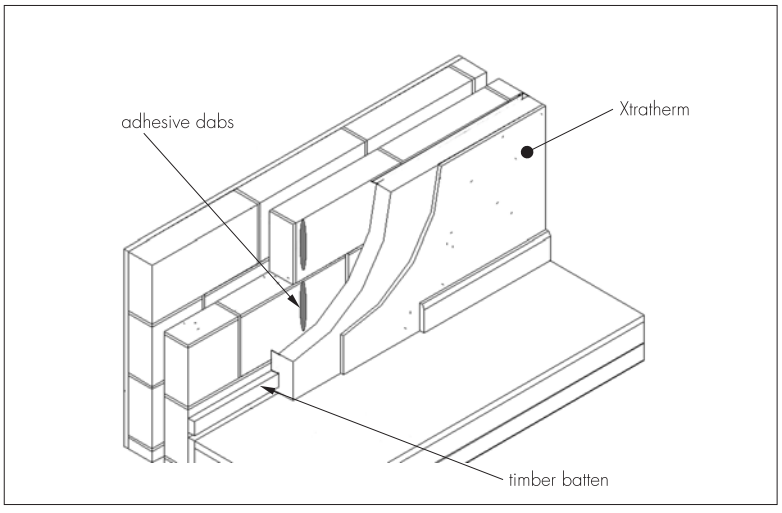

16.10 Adhesive dabs are applied to the back of the board and continuous ribbons of adhesive are placed around any openings or service penetrations.

16.11 The board is placed onto the wall and positioned using wedges. Pressure is applied to level the board until it is firmly embedded into the adhesive.

16.12 The board is fixed to the top and bottom battens using screws placed at a minimum of 150 mm centres. Screws must be placed at least 12 mm from the edge of the board and they should penetrate a minimum of 25 mm into the timber batten. A minimum of three nailable plugs should be used per sheet.

Mechanical — batten or metal furrings installation

16.13 Pre-treated timber battens or metal furrings are fixed horizontally at ceiling level and 20 mm above the finished floor. Vertical timber or steel members should be fixed at a maximum of 600 mm centres and additional battens/metal furrings should be used to support all board edges. All openings should be trimmed with timber or metal furrings.

16.14 Care must be taken to ensure the battens/metal furrings are wide enough to offer a minimum of 20 mm support to all four edges of the plasterboard.

Figure 3 Batten or metal furrings installation

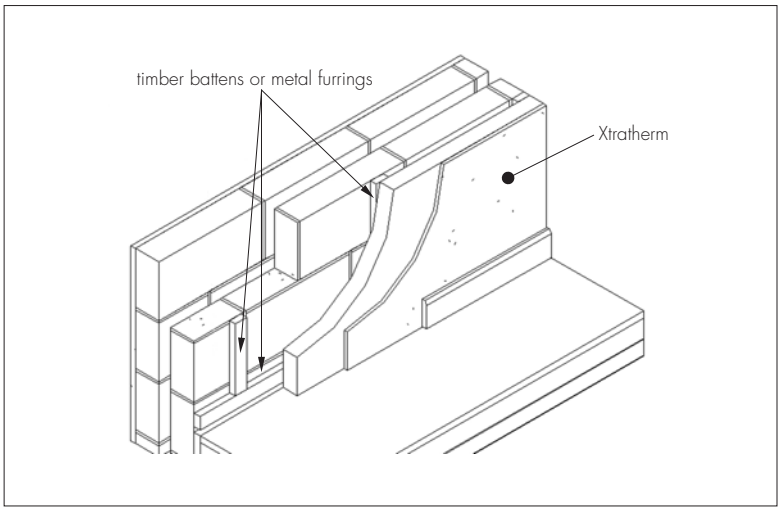

16.15 Where necessary, external corners of the insulation component of the board should be cut back to accommodate adjoining panels.

16.16 The board is placed onto the wall and positioned using wedges and is fixed to the battens using screws placed at a minimum of 150 mm centres. Screws must be placed at least 12 mm from the edge of the board and they should penetrate a minimum of 25 mm into the timber batten.

Ceiling installation

16.17 The product may be used to line horizontal or sloped ceilings. All four edges of the liners should be supported by rafters, joists or battens by at least 20 mm. This may necessitate the addition of timber noggings.

Figure 4 Ceiling installation

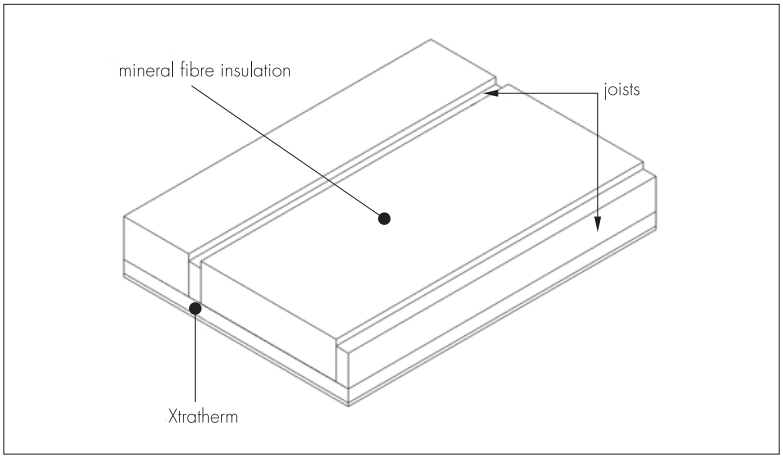

16.18 The board should be fixed using suitable large headed clout nails, sherardised nails or dry lining screws.

16.19 The board should be fixed to all of the rafters at a minimum of 250 mm centres. Fixings should be at least 12 mm from the edge of the thermal liner and must penetrate a minimum of 25 mm into the timber

17 Tests

Tests were carried out on Xtratherm XT/TL Thermal Liner by the BBA in accordance with BS EN 13165 : 2012 to determine:

- dimensional stability
- compressive strength
- thermal conductivity.

18 Investigations

18.1 The manufacturing process was examined, including the methods adopted for quality control, and details were obtained of the quality and composition of the materials used.

18.2 Results of test data to BS EN 13165 : 2012 were assessed in relation to:

- dimensions
- squareness
- density
- λ value.

18.3 An assessment of the risk of interstitial condensation was made.

18.4 An assessment was made of typical constructions which achieve the design U values.

Bibliography

BS 5250 : 2011 *Code of practice for control of condensation in buildings*

BS 5534 : 2003 *Code of practice for slating and tiling (including shingles)*

BS 6229 : 2003 *Flat roofs with continuously supported coverings — Code of practice*

BS 6576 : 2005 *Code of practice for diagnosis of rising damp in walls of buildings and installation of chemical damp-proof courses*

BS 8000-3 : 2001 *Workmanship on building sites — Code of practice for masonry*

BS 8000-8 : 1994 *Workmanship on building sites — Code of practice for plasterboard partitions and dry linings*

BS 8212 : 1995 *Code of practice for dry lining and partitioning using gypsum plasterboard*

BS 8217 : 2005 *Reinforced bitumen membranes for roofing — Code of practice*

BS EN 520 : 2004 *Gypsum plasterboards — Definitions, requirements and test methods*

BS EN 1996-1-1 : 2005 *Eurocode 6 : Design of masonry structures — General rules for reinforced and unreinforced masonry structures*

NA to BS EN 1996-1-1 : 2005 *UK National Annex to Eurocode 6 : Design of masonry structures — General rules for reinforced and unreinforced masonry structures*

BS EN 1996-1-2 : 2005 *Eurocode 6 : Design of masonry structures — General rules — Structural fire design*

NA to BS EN 1996-1-2 : 2005 *UK National Annex to Eurocode 6 : Design of masonry structures — General rules — Structural fire design*

BS EN 1996-2 : 2006 *Eurocode 6 : Design of masonry structures — Design considerations, selection of materials and execution of masonry*

NA to BS EN 1996-2 : 2006 *UK National Annex to Eurocode 6 : Design of masonry structures — Design considerations, selection of materials and execution of masonry*

BS EN 1996-3 : 2006 *Eurocode 6 Design of masonry structures — Simplified calculation methods for unreinforced masonry structures*

NA to BS EN 1996-3 : 2006 *UK National Annex to Eurocode 6 Design of masonry structures — Simplified calculation methods for unreinforced masonry structures*

BS EN 13165 : 2012 *Thermal insulation products for buildings — Factory made rigid polyurethane foam (PUR) products — Specification*

BS EN ISO 6946 : 2007 *Building components and building elements — Thermal resistance and thermal transmittance — Calculation method*

BS EN ISO 9001 : 2008 *Quality management systems — Requirements*

BS EN ISO 10456 : 2007 *Building materials and products — Hygrothermal properties — Tabulated design values and procedures for determining declared and design thermal values*

BRE Information Paper IP 1/06 *Assessing the effects of thermal bridging at junctions and around openings*

BRE Report (BR 262 : 2002) *Thermal insulation: avoiding risks*

BRE Report (BR 443 : 2006) *Conventions for U-value calculations*

19 Conditions

19.1 This Certificate:

- relates only to the product/system that is named and described on the front page
- is issued only to the company, firm, organisation or person named on the front page — no other company, firm, organisation or person may hold or claim that this Certificate has been issued to them
- is valid only within the UK
- has to be read, considered and used as a whole document — it may be misleading and will be incomplete to be selective
- is copyright of the BBA
- is subject to English Law.

19.2 Publications, documents, specifications, legislation, regulations, standards and the like referenced in this Certificate are those that were current and/or deemed relevant by the BBA at the date of issue or reissue of this Certificate.

19.3 This Certificate will remain valid for an unlimited period provided that the product/system and its manufacture and/or fabrication, including all related and relevant parts and processes thereof:

- are maintained at or above the levels which have been assessed and found to be satisfactory by the BBA
- continue to be checked as and when deemed appropriate by the BBA under arrangements that it will determine
- are reviewed by the BBA as and when it considers appropriate.

19.4 The BBA has used due skill, care and diligence in preparing this Certificate, but no warranty is provided.

19.5 In issuing this Certificate, the BBA is not responsible and is excluded from any liability to any company, firm, organisation or person, for any matters arising directly or indirectly from:

- the presence or absence of any patent, intellectual property or similar rights subsisting in the product/system or any other product/system
- the right of the Certificate holder to manufacture, supply, install, maintain or market the product/system
- actual installations of the product/system, including their nature, design, methods, performance, workmanship and maintenance
- any works and constructions in which the product/system is installed, including their nature, design, methods, performance, workmanship and maintenance
- any loss or damage, including personal injury, howsoever caused by the product/system, including its manufacture, supply, installation, use, maintenance and removal
- any claims by the manufacturer relating to CE marking.

19.6 Any information relating to the manufacture, supply, installation, use, maintenance and removal of this product/system which is contained or referred to in this Certificate is the minimum required to be met when the product/system is manufactured, supplied, installed, used, maintained and removed. It does not purport in any way to restate the requirements of the Health and Safety at Work etc. Act 1974, or of any other statutory, common law or other duty which may exist at the date of issue or reissue of this Certificate; nor is conformity with such information to be taken as satisfying the requirements of the 1974 Act or of any statutory, common law or other duty of care.

British Board of Agrément
Bucknalls Lane
Watford
Herts WD25 9BA

©2013

tel: 01923 665300
fax: 01923 665301
e-mail: mail@bba.star.co.uk
website: www.bbacerts.co.uk