Section A:
1 Inlet
2 Water heating coil
3 Panel and bag filter
Section B:
4 Heat wheel
Section C:
5 Plenum Fan
Section D:
6 Water cooling coil
7 Access
8 Water heating coil
9 Outlet
Section E:
10 Inlet
11 Panel filter
Section F:
12 Plenum Fan
13 Outlet

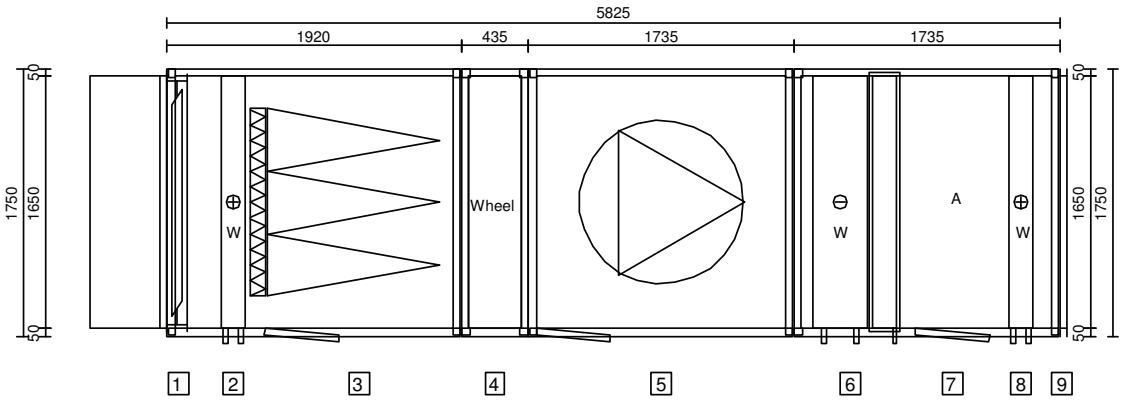

BARKELL Ltd.
Unit 22, No. 1 Industrial Estate
Consett, Co. Durham, DH8 6SZ
Tel 01207 590575
Fax 01207 501541
Email ahu@barkell.co.uk

Project : Manchester Crown Courts (Budget Costs)		Project ref : BK043449	Date : 06 Mar 2014
Unit reference : Court 1 (External T/W Option)		Unit Number : 001	Title : Plan Lower Deck
Number off : 001		Revision : 1	Not to scale