Air Conditioning

Product Information

PURY-EP300YKM-A : High COP R2 Series

12hp Outdoor Unit

R410A Heat Recovery





Throughout the year, many buildings require cooling in some areas and heating in others - even in adjacent rooms. The outstanding City Multi R2 system meets this requirement by distributing surplus heat from cooling operations (and vice versa) to rooms where it is needed. This efficiency can result in energy savings of up to 30% over conventional systems.

MITSUBISHI ELECTRIC

LIVING ENVIRONMENTAL SYSTEMS

FEATURES

COP HPH | DC | HS | NR

OUTDOOR

Heating Capacity (kW) (nominal)	37.5
Cooling Capacity (kW) (nominal)	33.5
High Performance Heating Capacity (kW) (UK)	35.6
COP Priority Heating Capacity (kW) (UK)	32.3
Cooling Capacity (kW) (UK)	31.5
Heating Power Input (kW) (nominal)	9.56
Cooling Power Input (kW) (nominal)	8.03
High Performance Heating Power Input (kW) (UK)	12.71
COP Priority Heating Power Input (kW) (UK)	9.27
Cooling Power Input (kW) (UK)	5.14
COP / EER (nominal)	3.92 / 4.17
SCOP / SEER	5.34 / 8.7
Max No. of Connectable Indoor Units	30
Airflow (m^3/min)	320
Sound Pressure Level (dBA)	60
Sound Power Level (dBA)	80
Weight (kg)	322
Dimensions (mm) Width x Depth x Height	1750 x 740 x 1710
Electrical Supply	380-415V, 50HZ
Phase	3
Starting Current (A)	8
Running Current (A) - Heating	14.7
Running Current (A) - Cooling	12.74
Fuse Rating (MCB sizes BS EN 60947-2) - (A)	25
Mains Cable No. Cores	4 + EARTH

DIMENSIONS

PURY-EP300YKM-A

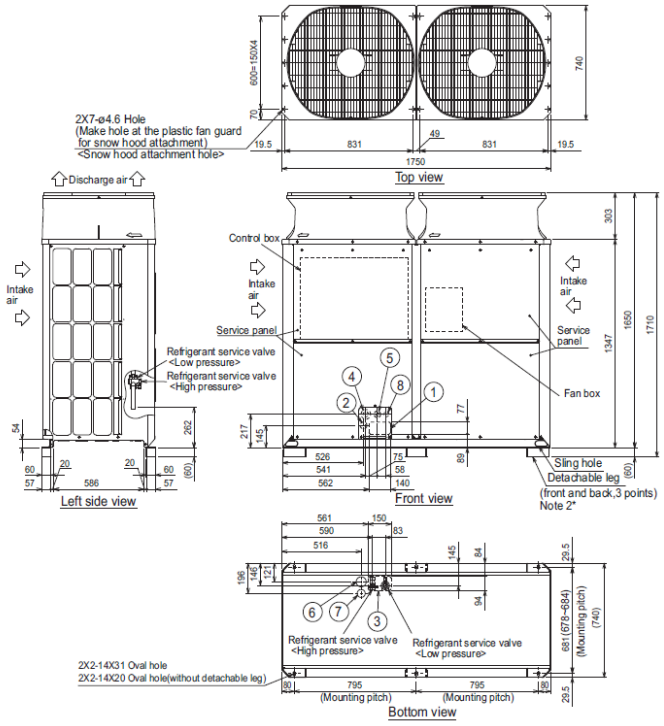

MITSUBISHI ELECTRIC
LIVING ENVIRONMENTAL SYSTEMS

Telephone: 01707 282880 Fax: 01707 278881

Email: airconditioning@meuk.mee.com Website: http://www.airconditioning.mitsubishielectric.co.uk

Country of origin: United Kingdom – Japan – Thailand – Malaysia. © Mitsubishi Electric Europe 2013. Mitsubishi and Mitsubishi Electric are trademarks of Mitsubishi Electric Europe B.V. The company reserves the right to make any variation in technical specification to the equipment described, or to withdraw or replace products without prior notification or public announcement. Mitsubishi Electric is constantly developing and improving its products. All descriptions, illustrations, drawings and specifications in this publication present only general particulars and shall not form part of any contract. All goods are supplied subject to the Company's General Conditions of Sale, a copy of which is available on request. Third-party product and brand names may be trademarks or registered trademarks of their respective owners.