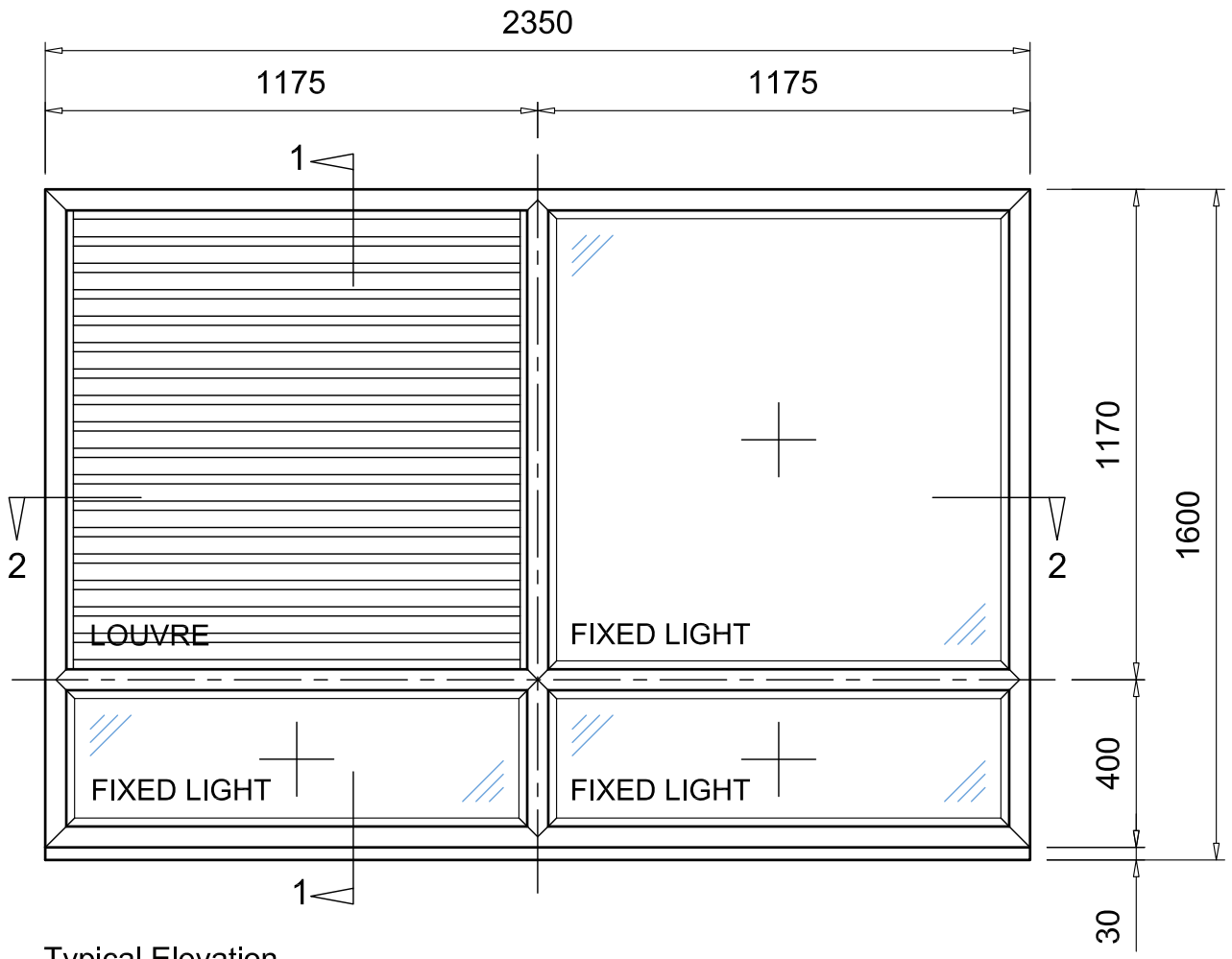

Typical Elevation

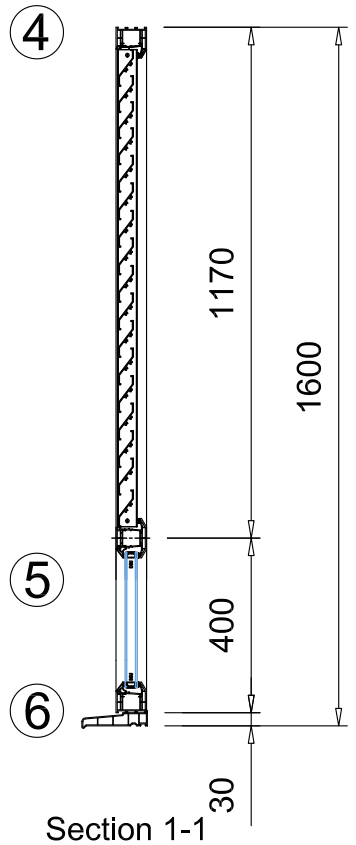

Section 1-1

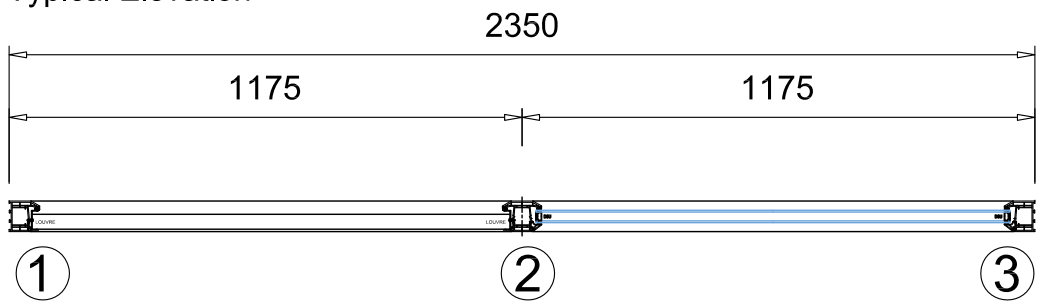

Section 2-2

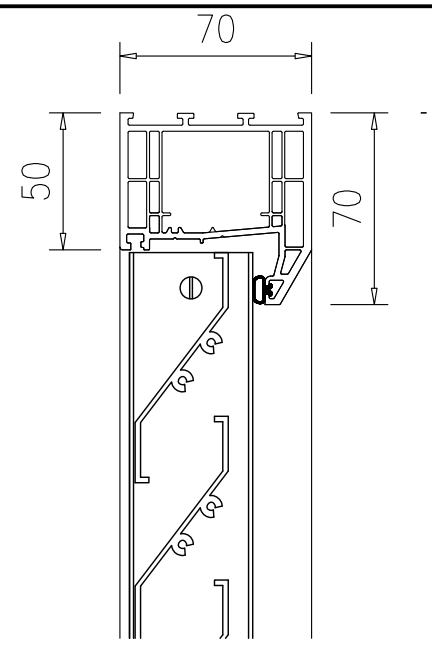

Detail 4

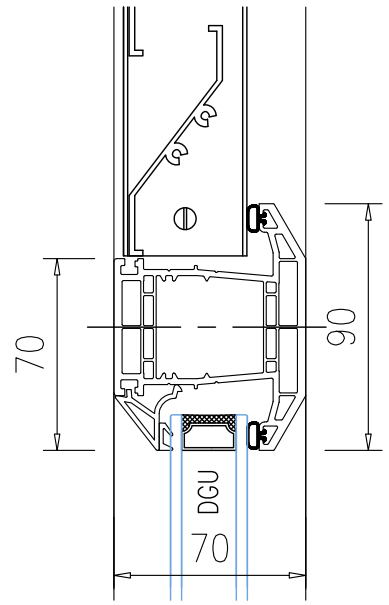

Detail 5

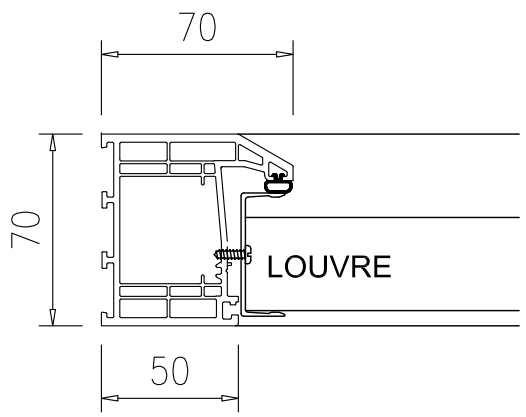

Detail 1

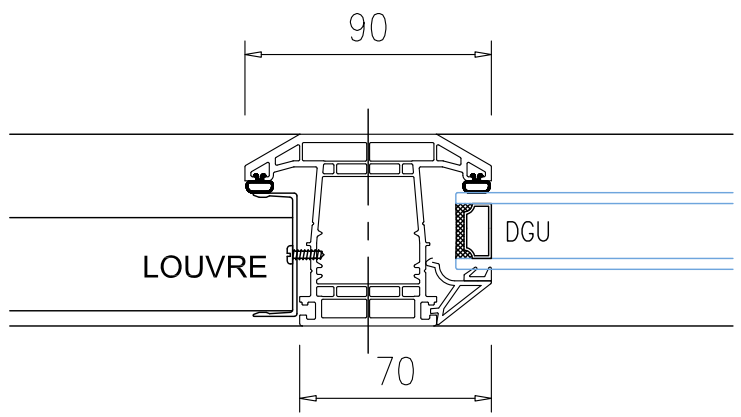

Detail 2

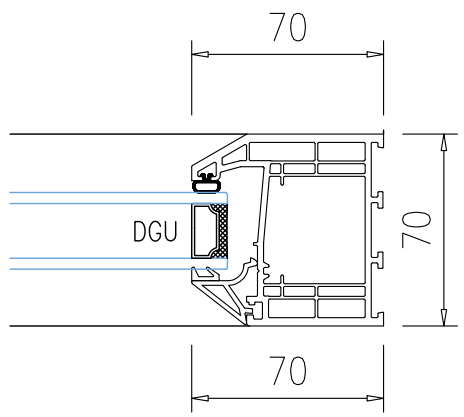

Detail 3

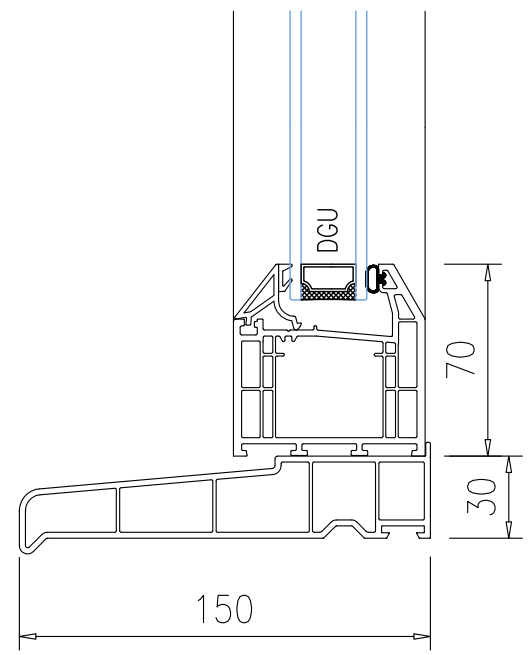

Detail 6

GENERAL NOTES:

THIS DRAWING IS COPYRIGHT OF OF EAST YORKSHIRE ALUMINIUM AND GLASS LTD AND MUST NOT BE COPIED OR REPRODUCED IN ANY WAY WITHOUT WRITTEN PERMISSION OF EAST YORKSHIRE ALUMINIUM AND GLASS LTD.

ALL DRAWING ARE FROM THE OUTSIDE
OF THE BUILDING AND THE NOMENLETURE
USED IS TO BS4783: 1986

FOR THE TRANSFERANCE OF WIND LOADS TO THE HOST STRUCTURE IT IS IMPERATIVE THAT EYG ACHIEVE ADEQUATE FIXINGS AT THE HEAD AND BASE, IE TO A CONCRETE SLAB/FOOTING AT THE BASE AND TO SECONDARY STEEL AT THE HEAD, ANY REVEAL BLOCKWORK INTO WHICH ANCHORAGE FIXINGS ARE REQUIRED WILL NEED TO BE BUILT WITH MIN 7N BLOCKS.
FOR ANY AVOIDANCE OF ANY DOUBT, EYG LTD HAVE NOT INCLUDED WHATSOEVER FOR ANY CONCRETE BASES, STRUCTURAL OR SECONDARY STEELWORK OR BLOCKWORK OF ANY NATURE, THE EMPLOYER/CONTRACTOR IS DEEMED TO BE SOLELY RESPONSIBLE FOR THE DESIGN AND INSTALLATION OF ANY SUCH WORKS,THE COST OF WHICH IS TO BE BOURNE BY OTHERS.
IN THE CASE OF CURTAIN WALLING, AN EPDM SEAL IS LIMITED TO THE PERIMETER JAMBS AND HEAD/FLOOR INTERFACES FOR ENCLOSED ROOMS AND AROUND THE TOTAL PERIMETER OF THE CURTAIN WALL SCREEN ONLY FOR OPEN STAIRCASE AREAS, IN ALL CASES THE EPDM IS LIMITED TO 500MM IN TOTAL GIRTH.
PLEASE NOTE: WE HAVE NOT INCLUDED FOR SUPPLYING OR INSTALLING ANY OF THE FOLLOWING ITEMS: INTERNAL CILLS, INTERNAL OR EXTERNAL CLADDING SECTIONS, SOFFIT PANELS, CLOSURE FLASHINGS OR THE LIKE TO ANY ADJOINING FINISHES OF ANY NATURE, MANEFESTATIONS TO GLAZED UNITS, FIRE STOPPING, OR EPDM AIR SEAL TO ANY WINDOWS OR DOORS.
WINDOWS & DOOR FRAMES IN ACCORDANCE WITH BS8213 PART 4 AND THE CWCT TRAINING PACKAGE ARE TO BE FIXED AT A MAXIMUM RECOMMENDED DISTANCE OF 600MM, END FIXINGS, TYPICALLY 100mm FROM THE CORNER (MAX 150mm)
WE HAVE NOT INCLUDED FOR ANY GUARDING GLASS AS WE HAVE ASSUMED BARRIERS WILL BE FITTED WHERE REQUIRED
ALL SLIDING DOORS UNLESS NOTED OTHERWISE TO BE DESIGNED TO BS7036 1996

SUBJECT TO SPECIAL GLASS SPECIFICATIONS, THE SITE INSTALLATION DATES ARE AS FOLLOWS:
EYA PRODUCTS - 6 WEEKS
TECHNAL PRODUCTS - 8 WEEKS
FROM FULL & FINAL APPROVAL OF DRAWINGS.

APPROVAL STATUS :-

- ☐ STATUS 'A' DRAWING/DESIGN APPROVED WITH NO FURTHER COMMENTS PROCEED WITH PROCESSING & MANUFACTURE
- ☐ STATUS 'B' DRAWING/DESIGN APPROVED SUBJECT TO COMMENTS AMEND TO COMMENTS, PROCEED WITH MANUFACTURE
- ☐ STATUS 'C' DRAWING/DESIGN NOT APPROVED AMEND TO COMMENTS, RE-SUBMIT FOR APPROVAL

AMENDMENTS

REV	DATE	AMENDMENTS	INTL.
01	12/06/2014	To Sult HUB097.BEC.PS.06	DH

CLIENT:
GB Building Solutions Ltd

JOB TITLE:
Sharlston Redevelopment
Manchester

DRAWING TITLE:
Typical Louvre Window

EYG commercial glazing solutions
Wiltshire Road Dalrycoates Industrial Estate
Kingston Upon Hull HU4 6QQ
Tel (01482) 568726 Fax (01482) 573065
info@eyggroup.com

DATE: June 2014

DRAWN BY: EYG / DH
d.hargraves@eyggroup.com

CHECKED BY: EYG / MS
m.sutton@eyggroup.com

STATUS: Information

CONTRACT NUMBER: TBC

DRAWING NUMBER: SHAL / GB / 02

REVISION: 1

DO NOT SCALE FROM THIS DRAWING, IF IN DOUBT ASK.