This drawing is the property of Technical Signs and must not be reproduced in part or in full without prior consent of Technical Signs.

Existing

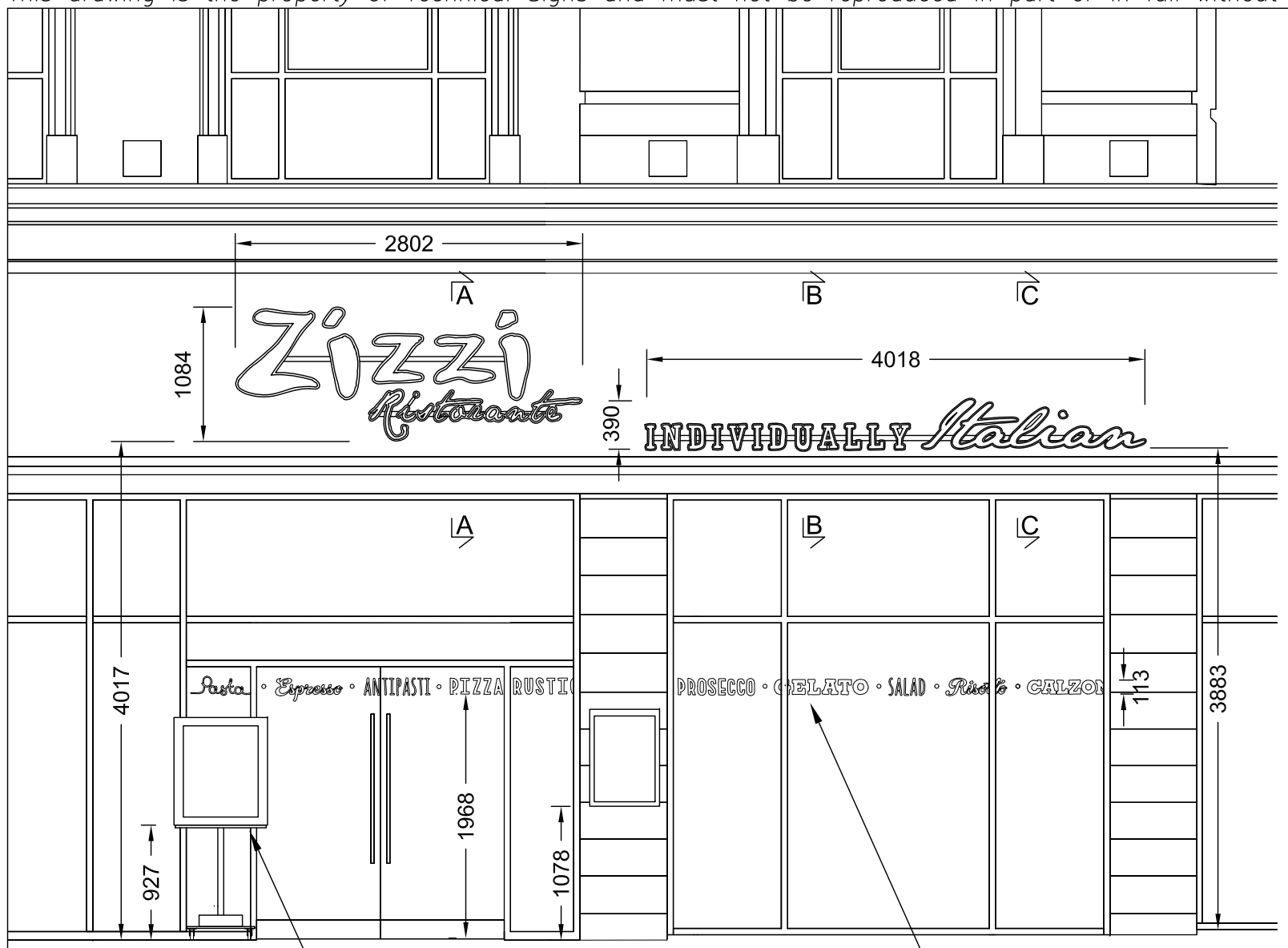

Front Elevation
Scale 1:50

Position of free standing menu

Vinyl, printed Pantone pink PMS 215c and cream PMS 7500c, is applied to the inside of the glazing

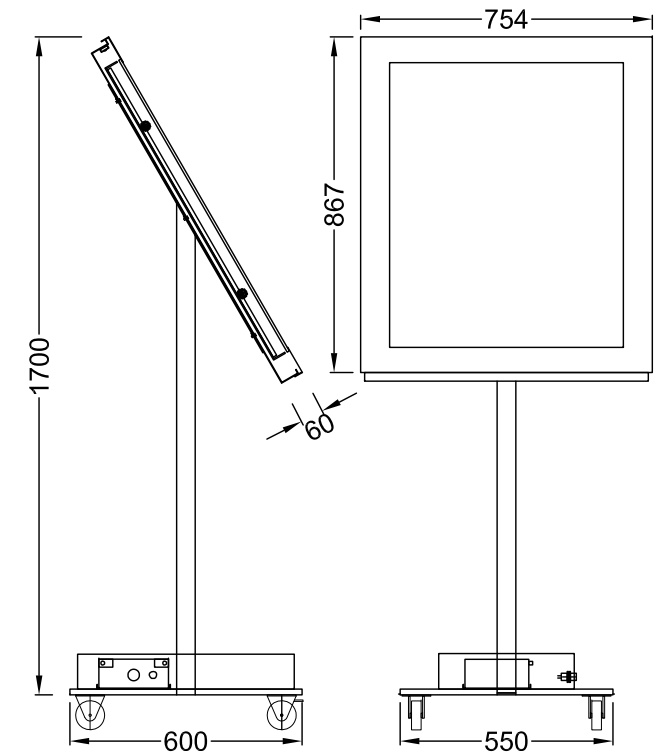

Free standing menu - 1 off
Scale 1:20
1.2mm descaled stainless steel box is finished *Farrow & Ball* Hague Blue.
Front and back are fitted with a piano hinge and cam locks.
Window is backed up with a 6mm clear glass panel.
3mm 1TL2 opal acrylic insert is fitted with a pin board.
Internally illuminated via low energy white LEDs.

Post from 48.3Ø brushed stainless steel welded to a 3mm mild steel top plate and a 10mm brushed stainless steel base plate.
4 swivel castor wheels are bolted to the base.

Base plate fitted with a sealed battery, IP68 2 way cable socket (RS 489-532) and a on/off key switch - all covered by a shroud from 1.2mm brushed stainless steel.

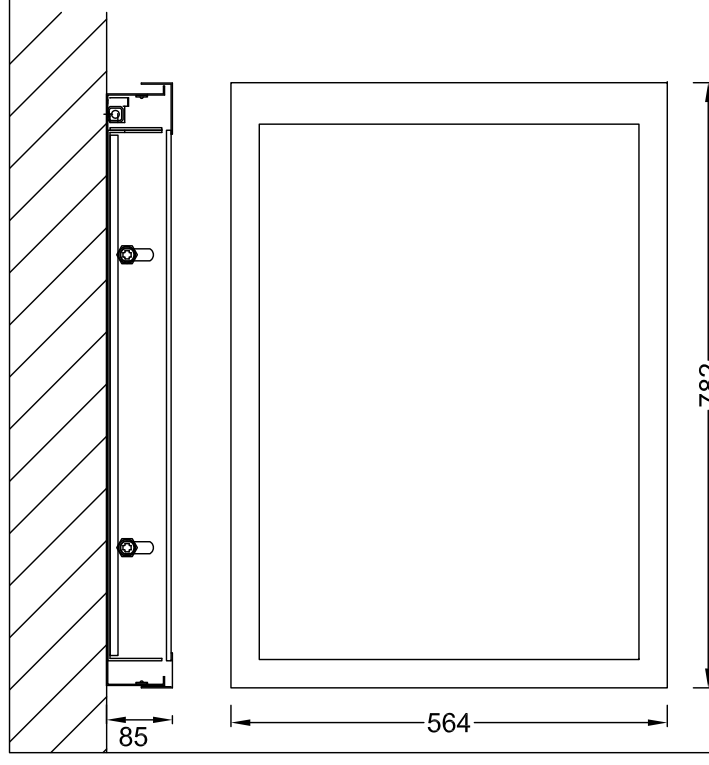

Wall mounted menu - 1 off
Scale 1:10
1.2mm descaled stainless steel box is finished *Farrow & Ball* Hague Blue.
Box is fitted with a continuous hinge and standard cam locks.
Window to be backed up with a 6mm clear toughened glass panel.
3mm 040 opal acrylic insert with a standard pin board.
Menu is fitted with low energy white LEDs in the top and bottom recesses.
Screw fixed to the wall.

Technical Signs
Floor 1 - Unit 3
Hille Business Centre
132 St Albans Road
Watford, Herts, WD24 4AE
Tel: 01923 811999
Fax: 01923 811998
E-mail: info@technicalsigns.co.uk

Client	Zizzi
Address/Job details	Unit 3 19-21 Piccadilly Manchester M1 1LR Existing Signage
Job No	
Drawn by	DN
Date	31/03/14
Scale	As specified (A3)
Drawing No	415075-1
Rev	