**Sign A**
2No. Double sided pictorial signs complete
with steel gibbets and illuminated by led trough lights.
**Size:** 900 x 1200mm. gibbet projection - 1200mm.




**Sign B**
1No. Set of individual locator fixed timber letters. Illuminated by led trough light.
**Size:** Span - 3000mm, N - 380mm, E - 290mm. Depth of letters and fixings - 37mm

NEW UNION

**Sign C**
1No. Set of individual locator fixed timber letters. Illuminated by led trough light.
**Size:** Span - 4000mm, N - 380mm, E - 290mm. Depth of letters and fixings - 37mm

NEW UNION INN

**Sign D**
1No. Set of individual locator fixed timber letters. Illuminated by led trough lights.
**Size:** Span - 2000mm, O/A Height - 1715mm, N - 475mm, E - 356mm.
Depth of letters and fixings - 37mm

NEW
UNION
INN

**Sign E (scale 1:10)**
10No. Low energy colour changing led floodlights
**Size:** 240 x 90 x 210mm

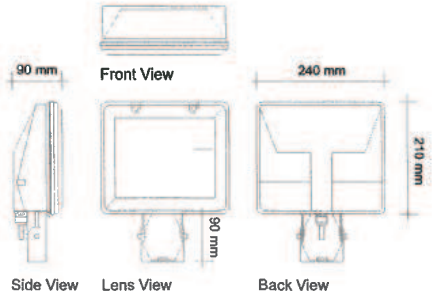


**Sign F**
2No. Sets of sign written lettering to render.
**Size:** 1200 x 1285mm

HOTEL
Rooms
CASK ALES
Warm & Friendly
WELCOME

**Sign G**
1No. Poster case. Illuminated
by tough light.
**Size:** 980 x 1680mm



**Sign H**
2No. Poster case. Illuminated
by tough lights.
**Size:** 980 x 1980mm




**Sign I**
All existing lanterns to remain.

0 .5 1.0 1.5 2.0 2.5 3.0 3.5 4.0
m

Copy Licence No. - 100048453

Scale 1:20 & 1:10 @ A3

alan@insigniasigns.biz

Marstons.
New Union Inn - Manchester.
26/03/14, 08/04/14, 11/04/14, dr.

| ral 7038 | black | silver | ral 5011 | matt black (windows) |
|---|---|---|---|---|

NB - please always refer to actual paint references for accurate colour representation

Insignia
t : 0113 243 8533 f : 0113 243 8733 / e-mail : sales@insigniasigns.biz / www.insigniasigns.biz

This document is the property of Insignia Signs who own the copyright therein. The information in this document is given in confidence and without the written permission of Insignia Signs. Given by courtesy or otherwise the document must not be copied reprinted or reproduced in any material form either wholly or in part nor must the contents of the document or any method or technique available therefrom be disclosed to any third party.

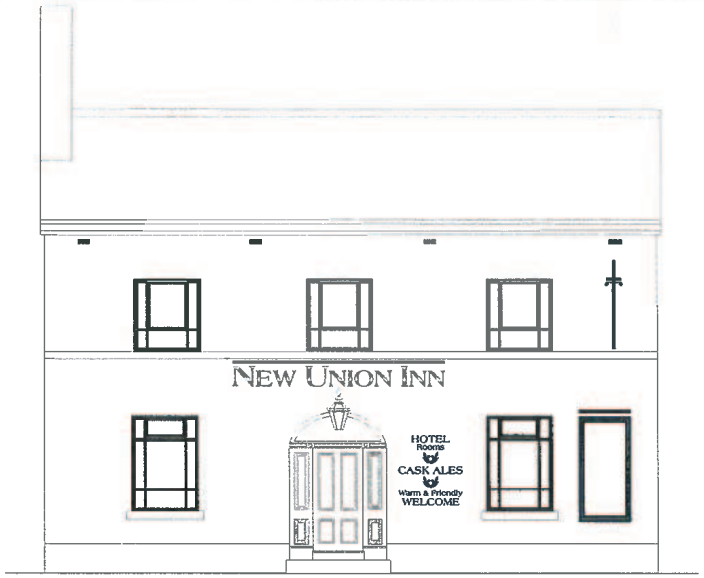


Princess Street Elevation - Scale 1:100




Side Elevation - Scale 1:100




Canal Elevation - Scale 1:100




Copy Licence No. - 100048453

**Scale 1:100 @ A3**

alan@insigniasigns.biz

Marstons.
New Union Inn - Manchester.
26/03/14, 08/04/14, 11/04/14, dr.

| ral 7038 | black | silver | ral 5011 | matt black (windows) |
|---|---|---|---|---|

NB - please always refer to actual paint references for accurate colour representation

Insignia
t : 0113 243 8533 f : 0113 243 8733 / e-mail : sales@insigniasigns.biz / www.insigniasigns.biz

This document is the property of Insignia Signs who own the copyright therein. The information in this document is given in confidence and without the written permission of Insignia Signs. Given by contract or otherwise the document must not be copied reprinted or reproduced in any material form either wholly or in part nor must the contents of the document or any method or technique available therefrom be disclosed to any third party.

Scale 1:1250

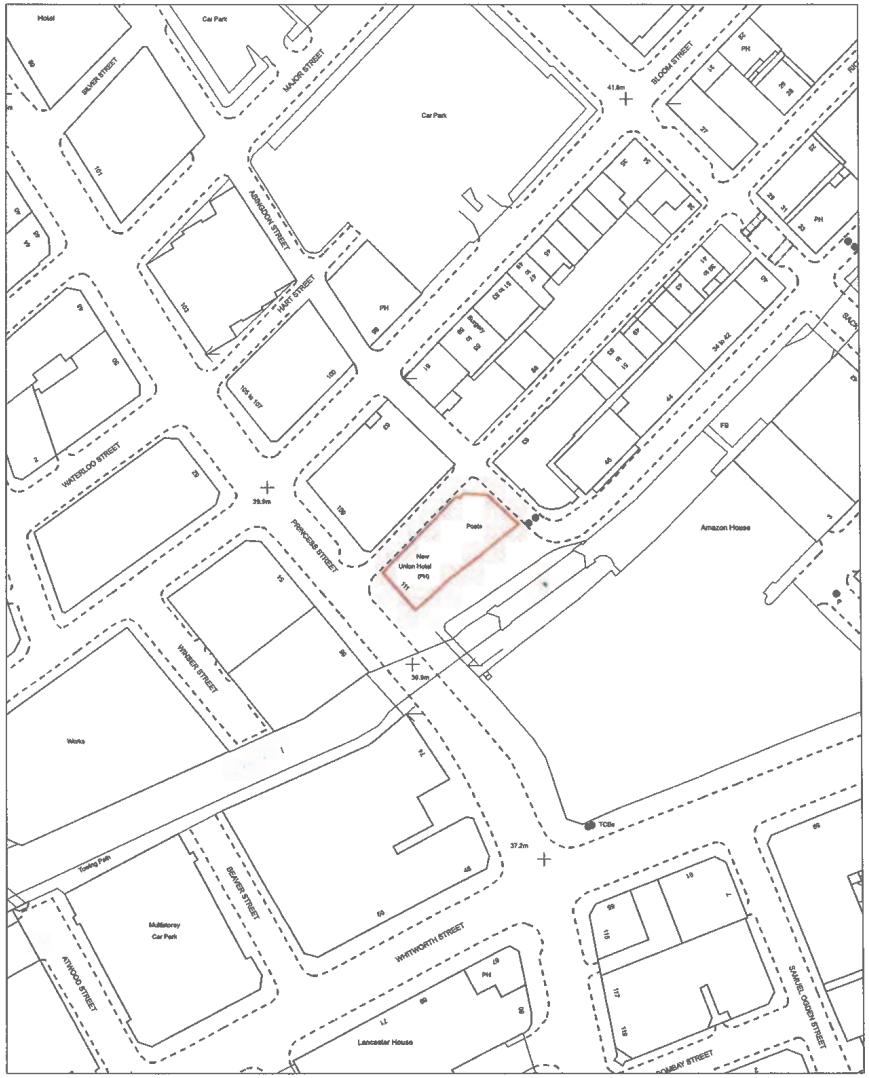


Scale 1:500

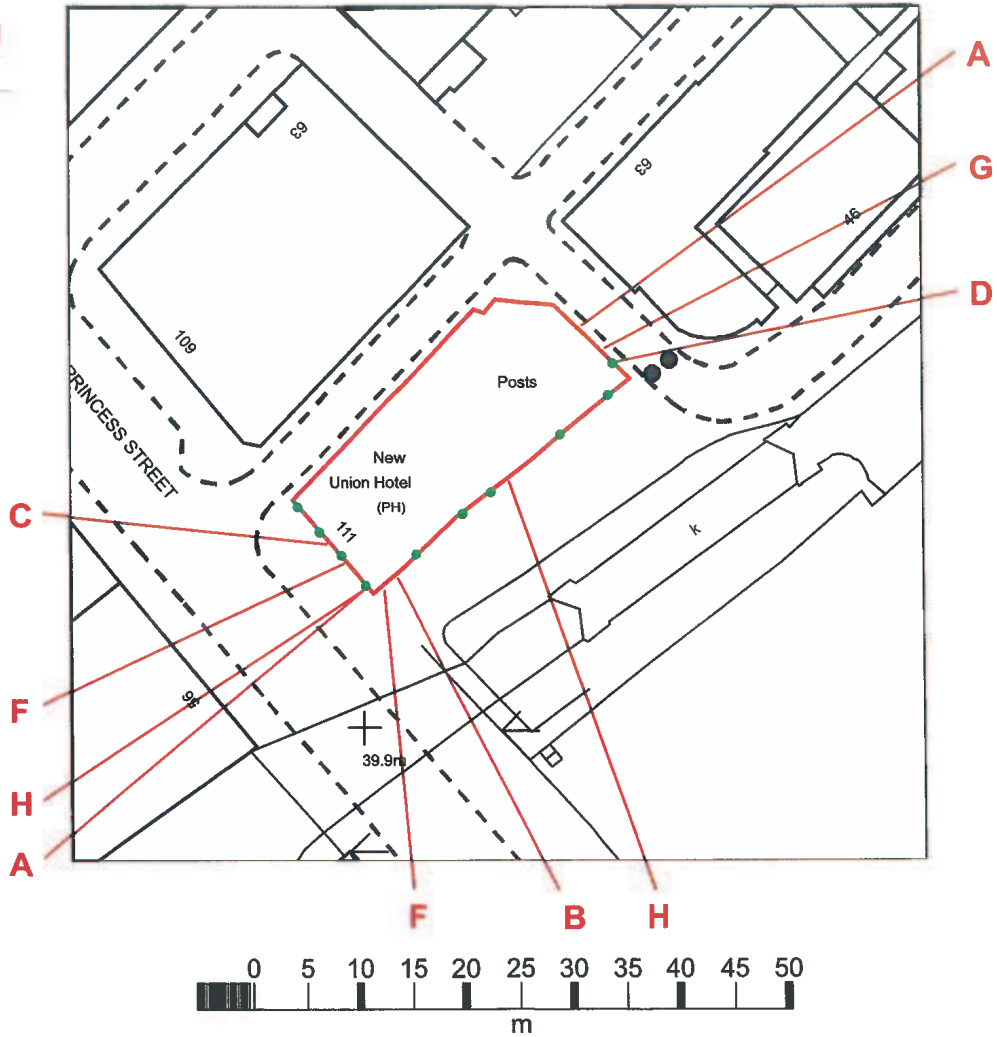


Copy Licence No. - 100048453

**Scale 1:1250 & 1:500 @ A3**

alan@insigniasigns.biz

Marstons.
New Union Inn - Manchester.
26/03/14, 08/04/14, 11/04/14, dr.

| ral 7038 | black | silver | ral 5011 | matt black (windows) |
|---|---|---|---|---|

NB - please always refer to actual paint references for accurate colour representation

Insignia

t : 0113 243 8533 f : 0113 243 8733 / e-mail : sales@insigniasigns.biz / www.insigniasigns.biz

This document is the property of Insignia Signs who own the copyright therein. The information in this document is given in confidence and without the written permission of Insignia Signs. Given by contract or otherwise the document must not be copied reprinted or reproduced in any material form either wholly or in part nor must the contents of the document or any method or technique available therefrom be disclosed to any third party.

SIGN A - scale 1:10

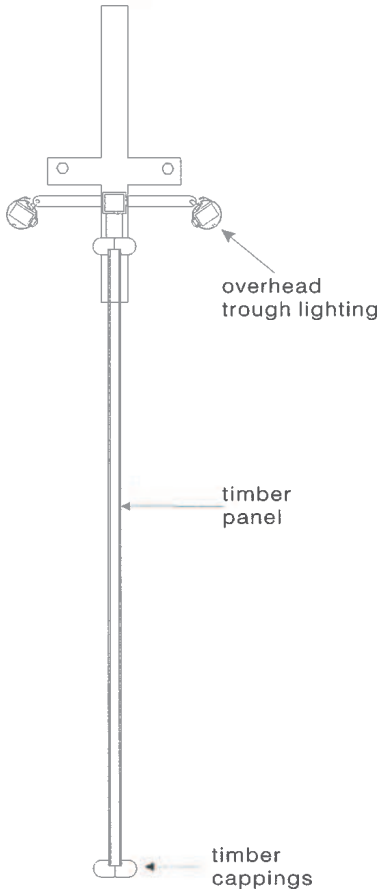


SIGNS B & C - scale 1:10

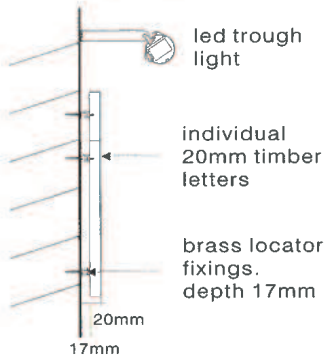


SIGN D - scale 1:10

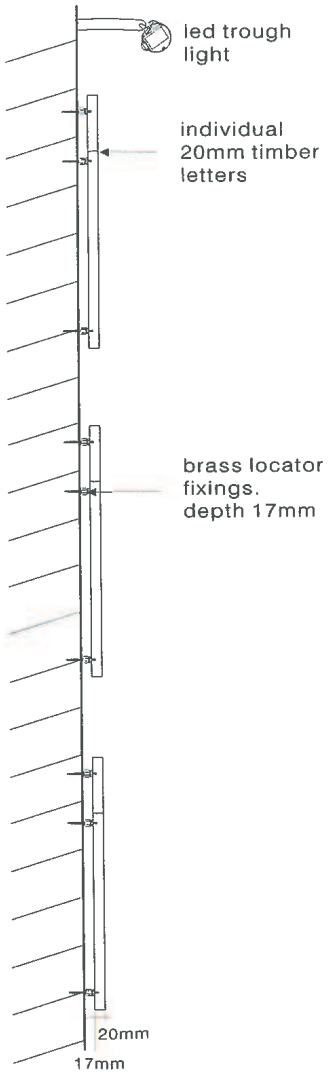


SIGN G - scale 1:10

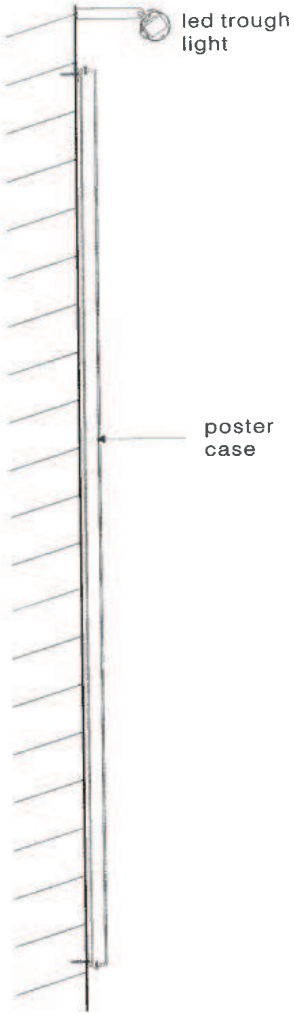


SIGN H - scale 1:10

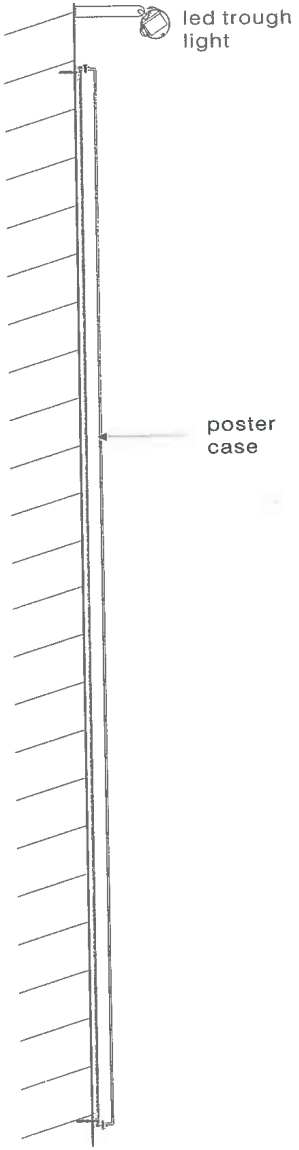


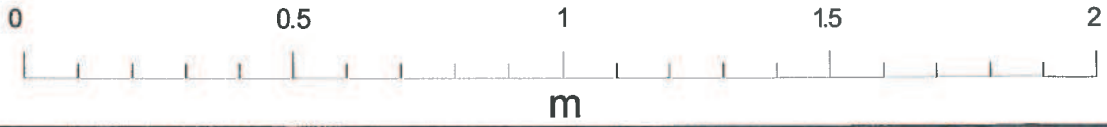


Copy Licence No. - 100048453

**Scale 1:10 @ A3**

alan@insigniasigns.biz

Marstons.
New Union Inn - Manchester.
26/03/14, 08/04/14, 11/04/14, dr.

| ral 7038 | black | silver | ral 5011 | matt black (windows) |
|---|---|---|---|---|

NB - please always refer to actual paint references for accurate colour representation

Insignia

t : 0113 243 8533 f : 0113 243 8733 / e-mail : sales@insigniasigns.biz / www.insigniasigns.biz

This document is the property of Insignia Signs who own the copyright therein. The information in this document is given in confidence and without the written permission of Insignia Signs. Given by contract or otherwise the document must not be copied reprinted or reproduced in any material form either wholly or in part nor must the contents of the document or any method or technique available therefrom be disclosed to any third party.