This drawing is the property of Technical Signs and must not be reproduced in part or in full without prior consent of Technical Signs.

Proposed

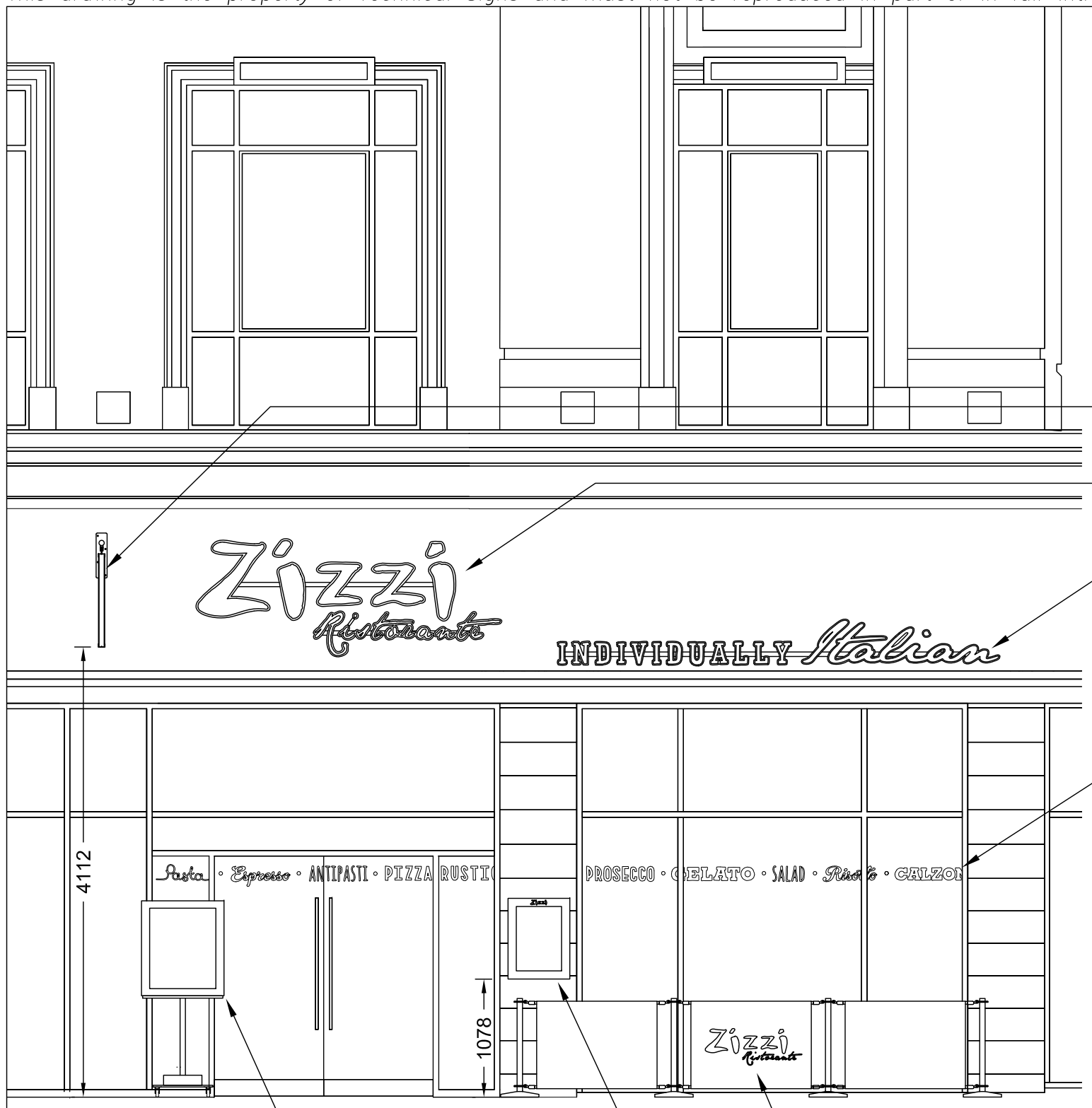

Front Elevation
Scale 1:50

Menu - 1 off
Scale 1:10
1.2mm descaled stainless steel box is finished *Farrow & Ball* Hague Blue.
Front and back are fitted with a continuous hinge and cam locks.
Window is backed up with a 6mm clear glass panel.
Fret cut text has opal 050 acrylic.
3mm 1TL2 opal acrylic insert is fitted with a pin board.
Internally illuminated via low energy white LEDs.
Screw fixed to the wall.

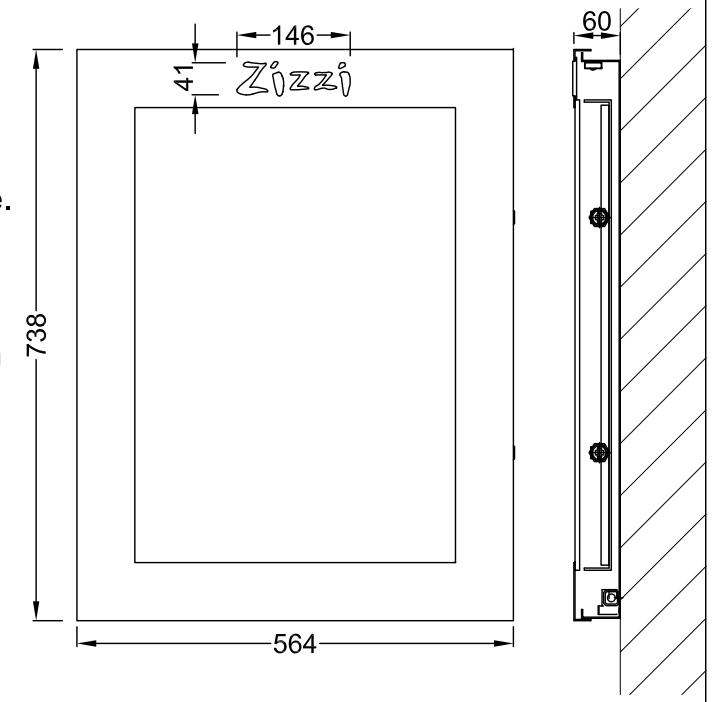

Projected sign - 1 off
Scale 1:10
Mild steel inner frame hangs from a black mild steel projecting arm.
Outer frame has 1.2mm descaled stainless steel rims and returns finished Farrow & Ball Hague Blue.
Outer frame holds 5mm 2765 cream plexiglass panels with applied vinyl printed grey avery 759 and pink PMS 215c.
Internal illumination with low energy white LEDs.

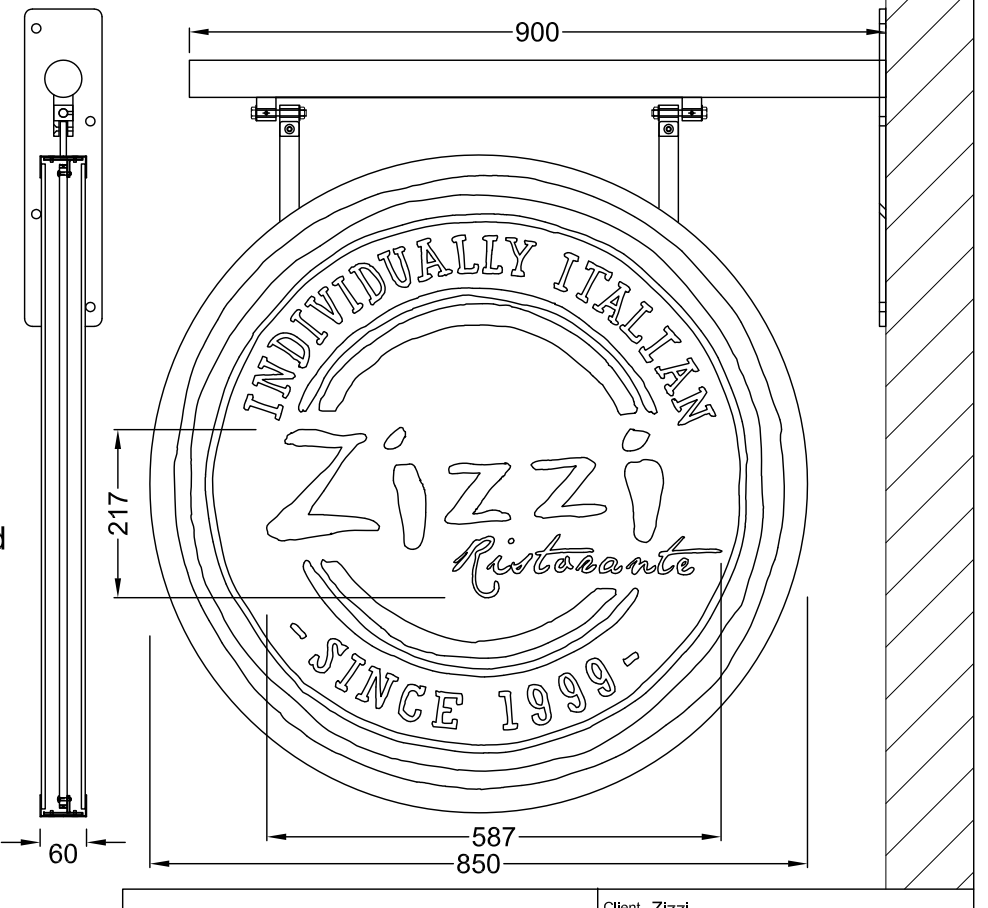

Technical Signs
Floor 1 - Unit 3
Hille Business Centre
132 St Albans Road
Watford, Herts, WD24 4AE
Tel: 01923 811999
Fax: 01923 811998
E-mail: info@technicalsigns.co.uk

Client	Zizzi
Address/Job details	Unit 3 19-21 Piccadilly Manchester M1 1LR
	Proposed Signage
Job No	
Drawn by	DN
Date	31/03/14
Scale	As specified (A3)
Drawing No	415075-3
Rev	