NEW CLASSROOM EXTENSION
SPECIFICATION SUMMARY

FLAT ROOF CONSTRUCTION

- Internal plasterboard ceiling finish with filled joints.
- Nominal 225mm x 47mm flat roof joists at maximum 600mm centres with timber firrings to provide required fall (roof joist sizes to be confirmed by Structural Engineer).
- 18mm exterior grade T&G plywood roof decking.
- Nominal 150mm thick Kingspan Thermaroof TR27 PIR flat insulation board over vapour control layer.
- Firestone RubberCover EPDM membrane fully bonded to insulation substrate with RubberCover bonding adhesive.
- Approximate roof U-value = 0.14 W/(m²K).

ROOF GUTTER

- 125mm x 125mm powder coated aluminium box gutter to match existing; contractor's choice. Gutter connected to existing adjacent box gutter served by existing rainwater downpipe.

EXTERNAL WALL CLADDING

- Trespa Meteon (satin finish) external quality high pressure laminate wall cladding panels fixed to full building height using secret channel fixing system or timber battens with open vertical joints between 1860mm wide panels – colours to be confirmed by the client. http://www.trespa.com/uk/product/trespar-meteonr-facades

USL Urban Surveying Limited
Construction & Property Consultants
CHANCERY PLACE
50 Brown Street
Manchester
M2 2JT
Tel: 0161 445 3771 Fax: 0161 445 8117
Web: www.urbansurveying.co.uk
E-mail: info@urbansurveying.co.uk
RICS

Directors
Ian Chadwick MRICS
James Donnison MRICS

Company No.
4453554

Registered Office
7 St Petersgate
Stockport
Cheshire
SK1 1EB

EXTERNAL WALL CONSTRUCTION

1. Breather membrane.
2. 12mm OSB3 timber sheathing (or equivalent).
3. Nominal 220mm x 45mm timber studs at 600mm centres (stud sizes to be confirmed by Structural Engineer).
4. Mineral wool thermal insulation (Density: 16-18 kg/m³, λ=0.037W/m·K).
5. Timber structural noggins.
6. Vapour check layer behind 12.5mm plasterboard with filled joints (plasterboard not shown).

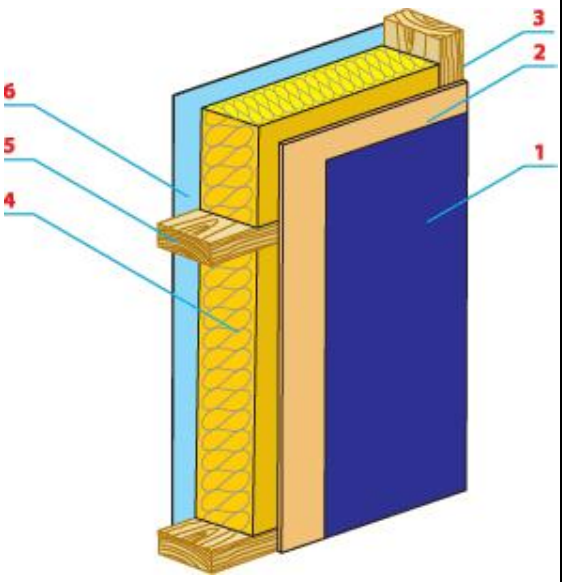

- Approximate external wall U-value = 0.20 W/(m²K).

EXTERNAL WINDOWS

- 2Nr. 1450mm high x 2750mm wide white uPVC framed double-glazed windows; each window incorporating 3Nr. top hung opening outward casement windows. Window cills set approximately 850mm above internal floor level.
- Profile 22 system, F170 profile range fully integrated 70mm frames incorporating 60mm sashes internally glazed with 24mm sealed double safety-glazed units.
- Ironmongery to comprise of stainless steel friction hinges with maximum 100mm opening restrictors, locking shootbolt handles and controllable head frame ventilators.

USL Urban Surveying Limited
Construction & Property Consultants
CHANCERY PLACE
50 Brown Street
Manchester
M2 2JT
Tel: 0161 445 3771 Fax: 0161 445 8117
E-mail: info@urbansurveying.co.uk
Web: www.urbansurveying.co.uk
RICS

Directors
Ian Chadwick MRICS
James Donnison MRICS

Company No.
4453554

Registered Office
7 St Petersgate
Stockport
Cheshire
SK1 1EB

EXTERNAL DOOR

- Gloss painted softwood timber frame and glazed door to match existing external door; refer to photograph.



- 44mm thick solid timber core door to be glazed with 6mm thick clear toughened glass with internal screw fixed softwood glazing beads.
- Door ironmongery to comprise of 1½ pairs steel butt hinges, Dorma TS71 overhead door closer (power size 3-4), 5 lever mortice lock and aluminium tubular lever mortice lock handles.
- Door and frame to be fitted with the Fingershield Door Protection Pack.



INTERNAL DECORATIONS

- Walls – painted plasterboard: water based primer/undercoat & 2 coats of Dulux Trade Diamond Matt; colour to be confirmed by client.
- Ceiling – painted plasterboard: water based primer/undercoat & 2 coats of Dulux Trade Diamond Matt; colour - white.
- Woodwork – gloss painted skirtings, architraves, window cills, doors (new and existing) and existing window: 1 coat of Dulux Trade Undercoat & 1 coat of Dulux Trade High Gloss; colour to be confirmed by client.

USL Urban Surveying Limited
Construction & Property Consultants
CHANCERY PLACE
50 Brown Street
Manchester
M2 2JT
Tel: 0161 445 3771 Fax: 0161 445 8117
E-mail: info@urbansurveying.co.uk
Web: www.urbansurveying.co.uk
RICS

Directors
Ian Chadwick MRICS
James Donnison MRICS

Company No.
4453554

Registered Office
7 St Petersgate
Stockport
Cheshire
SK1 1EB

SUB-STRUCTURE

- Nominal 150mm thick compacted hardcore
- Sand blinding layer
- 1200 gauge damp proof membrane (DPM)
- Nominal 150mm thick reinforced concrete floor slab with A393 mesh fabric reinforcement with 50mm minimum cover. Nominal 650mm wide x 750mm deep concrete trench fill foundation to extension wall perimeter – subject to Structural Engineer's confirmation
- Nominal 100mm thick Kingspan Thermafloor TF70 insulation
- Vapour control layer
- 18mm external quality T & G chipboard

- Approximate floor U-value = 0.18 W/(m²K)

FLOOR FINISHES

- Polysafe Arena PUR sheet vinyl flooring http://www.polyflor.com/jh/products.nsf/products!open&family=saf&prodcode=FXSC239

LIGHT FITTINGS

- 4Nr. Duet T5 surface ceiling fixed light fittings, each comprising 2Nr. T5 tubes complete with Cat 2 louvre and mini head sensor.



ELECTRICAL SOCKETS

- MK white plastic double switched socket outlets.



USL Urban Surveying Limited
Construction & Property Consultants
CHANCERY PLACE
50 Brown Street
Manchester
M2 2JT
Tel: 0161 445 3771 Fax: 0161 445 8117
E-mail: info@urbansurveying.co.uk
Web: www.urbansurveying.co.uk
RICS

Directors
Ian Chadwick MRICS
James Donnison MRICS

Company No.
4453554

Registered Office
7 St Petersgate
Stockport
Cheshire
SK1 1EB

ELECTRIC HEATER UNIT

- Creda LST (Series 8) low surface temperature electric panel heaters (size and number to be confirmed).



USL Urban Surveying Limited
Construction & Property Consultants
CHANCERY PLACE
50 Brown Street
Manchester
M2 2JT
Tel: 0161 445 3771 Fax: 0161 445 8117
E-mail: info@urbansurveying.co.uk
Web: www.urbansurveying.co.uk
RICS

Directors
Ian Chadwick MRICS
James Donnison MRICS

Company No.
4453554

Registered Office
7 St Petersgate
Stockport
Cheshire
SK1 1EB