NOTES :

ALL SETTING OUT MUST BE CHECKED ON SITE
ALL LEVELS MUST BE CHECKED ON SITE
ALL FIXINGS AND WEATHERINGS MUST BE CHECKED ON SITE
ALL DIMENSIONS MUST BE CHECKED ON SITE
THIS DRAWING MUST BE READ IN CONJUNCTION WITH THE RELEVANT SPECIFICATION CLAUSES
THIS DRAWING MUST NOT BE USED FOR LAND TRANSFER PURPOSES

© BUTLER ASSOCIATES

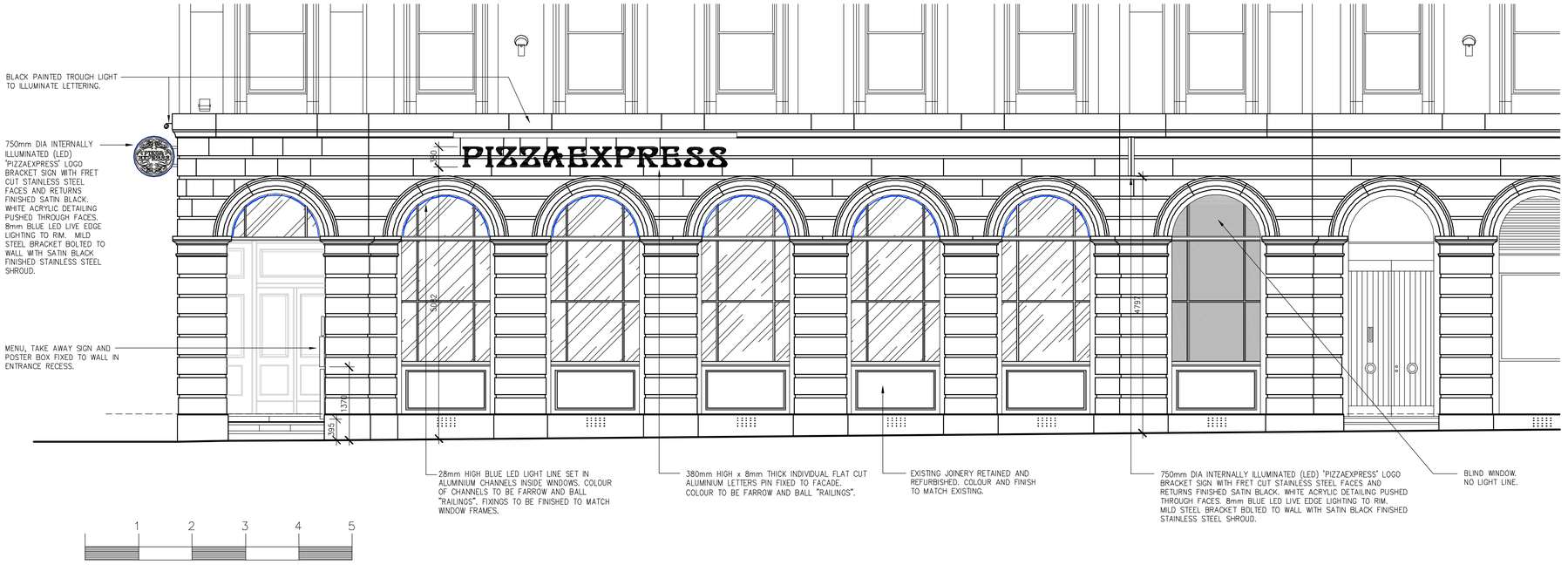

01/14 ELEVATION TO PALL MALL
SCALE 1:50

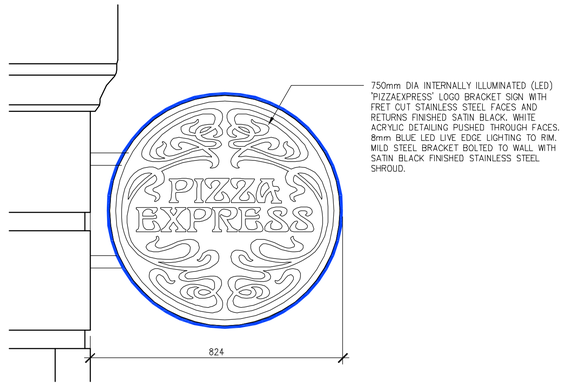

03/14 BRACKET SIGN DETAIL
SCALE 1:10

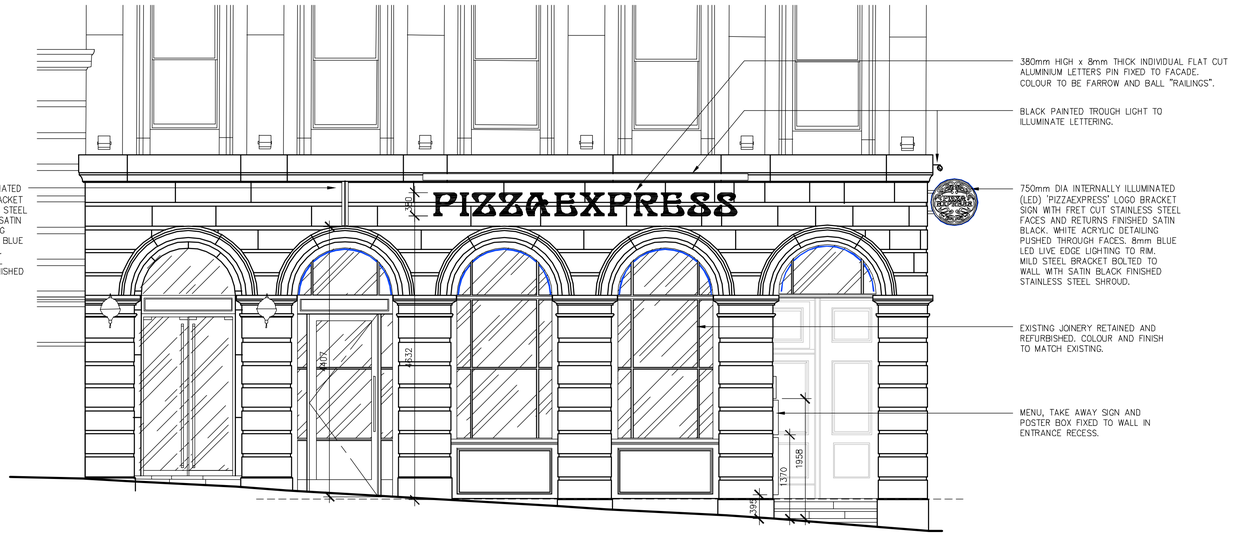

02/14 ELEVATION TO KING STREET
SCALE 1:50

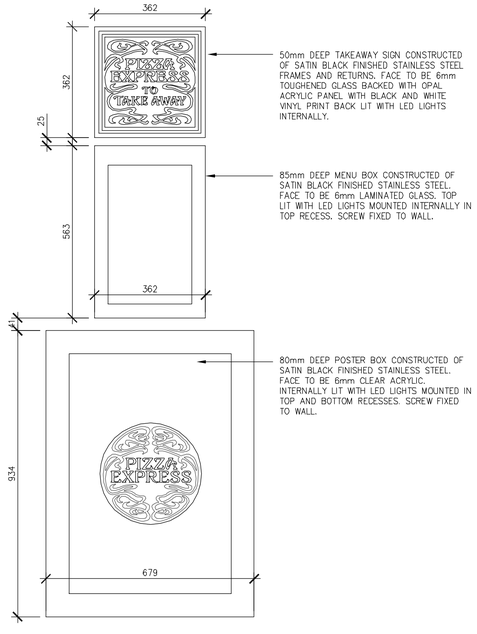

04/14 MENU CLUSTER DETAIL
SCALE 1:10

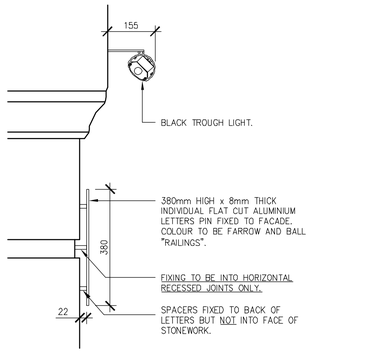

05/14 SECTION THRU' LETTERING
SCALE 1:10

revision | date | notes

BUTLER ASSOCIATES
ARCHITECTURE DESIGN & PROJECT MANAGEMENT
24 , CHIPSTEAD STATION PARADE , CHIPSTEAD , CR5 3TE
T 020 8224 6696 F 01737 553865 E mail@butlerassoc.co.uk

Client

PIZZAEXPRESS

Location

PIZZAEXPRESS
84, KING STREET
MANCHESTER M2 4WQ

Drawing

PROPOSED
FRONT AND SIDE
ELEVATIONS

Date
FEBRUARY 2014

Scale @ A3 = 1:20, 1:100
Scale @ A1 = 1:10, 1:50

Drawing No.
1354/14

Rev.

FOR APPROVAL