ELTA SELECT



Biflow SB Conical

t: **01384 275800**
f: **01384 275810**
e: **bs@eltafans.com**
visit: **eltaselect.com**

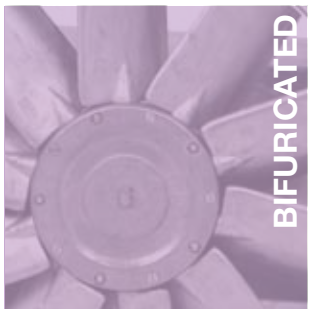

Catalogue Guide

Icon Key

info

The Select Catalogue has a number of symbols and icons, designed to make the catalogue quicker and easier to use. An explanation of these are listed below:

Application Icons

Applications are now represented via a set of pictorial icons. The application icons key is featured on the facing page. Some applications have been grouped together, where the environmental conditions have similarities.

New Products

NEW PRODUCT

The icon to the right indicates a new addition to the Select product range. This will be displayed on the introductory page of each product and can also be seen on the contents page for each category.

More Information Box

A more information box now also features on each introductory product page. This makes it easier to locate any further information you may require by displaying the page number to refer to, or directing you to the website - www.eltaselect.com.

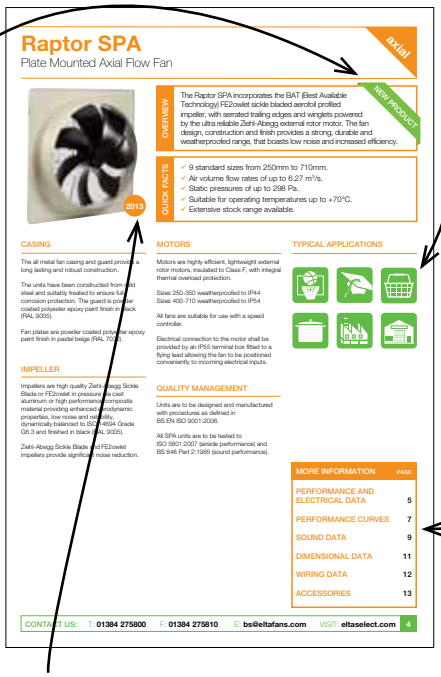

2013

2013

New legislation has driven change in the Elta Select range of products. Elta Fans have revolutionised both their new and existing product range to meet legislation directives, but also to incorporate the ‘Best Available Technology’; creating a reliable efficient and powerful range of products. The products which conform to the 2013 legislation are indicated with the above logo. This logo is pictured both on the main product page and the category contents page.

Catalogue Guide

Application Key

info

Each product has an indication of typical applications via a set of icons.
Every icon is displayed below, along with the definition of what it represents.



Sports Hall
Squash Courts
Gymnasium



Schools
Colleges



Shopping Mall



Shops
Retail Parks
Commercial



Kitchens



Factories
Industrial Units



Warehousing



Shower Rooms
Bathrooms
Toilets
Changing Rooms



Marine



Agriculture



Airports



Corrosive
Atmospheres



Banks



Hospitals



Hotels



Restaurants
Cafes
Cafeterias
Pubs



Theatres



Air Conditioning



Residential
Public Buildings
Entrance Halls



Underground
Stations



Libraries



Offices



Laundries
Utility Rooms



Temporary
Ventilation
Construction
Sites



Enclosed Car
Parks



Stairwell
Pressurisation



Workshops
Foundries
Welding Bays
Machine Shops
Spray Booths
Lift Motor Rooms



Marquees



Conference Halls



Cooling Towers
Stations
Boiler Houses
Heavy Industrial



Hot Gas
Situations



General HVAC

Biflow SB (CON)

Bifurcated Conical Axial Flow Fan

bifur.



OVERVIEW

The Biflow SB (CON) is a quality range of bifurcated axial fans with a conical casing, specially developed for handling more hostile air movement applications. The Biflow SB is designed so that air throughput totally by-passes the motor, keeping the motor out of the airstream in a cooler environment.

QUICK FACTS

- ✓ 4 standard sizes from 250mm to 500mm.
- ✓ Air volume flow rates of up to 3.80 m^3/s.
- ✓ Static pressures of up to 600 Pa.
- ✓ Suitable for operating temperatures up to +200°C.
- ✓ Ideal for internal or external mounting.

CASING

The all metal fan casing provides a long lasting and robust construction.

The units have been constructed from a single sheet of steel, axial impellers are mounted within the length of the unit casing; the motor is to be located in a tunnel which traverses the casing making the unit suitable for temperatures up to +200°C.

All casing parts are heavy gauge mild steel sheet, roll formed and welded, then hot dip galvanised to BS EN ISO 1461:1999 after fabrication.

IMPELLER

Adjustable pitch aerofoil impellers are provided with blades made from high quality pressure die cast aluminium (LM6), natural finish.

Impellers are factory set at an angle to provide maximum performance.

The hubs are manufactured from die cast aluminium alloy (LM24).

Assembled impellers are to be dynamically balanced to ISO 14694 Grade G6.3.

MOTORS

Motors are to be foot mounted totally enclosed metric type to IP55, with sealed for life bearings, standard industrial paint finish and Class H insulation to EN 60034-5.

QUALITY MANAGEMENT

Units are to be designed and manufactured with procedures as defined in BS EN ISO 9001:2008.

All SB (CON) units are to be tested to ISO 5801:2007 (airside performance) and BS 848 Part 2:1985 (sound performance).

TYPICAL APPLICATIONS



MORE INFORMATION

	PAGE
PERFORMANCE AND ELECTRICAL DATA	5
PERFORMANCE CURVES	5
SOUND DATA	5
DIMENSIONAL DATA	7
SILENCER DATA	7
WIRING DATA	8
ACCESSORIES	9

Biflow SB (CON)

Performance and Electrical Data

SINGLE Phase - 220-240V / 50Hz

Product Code	Speed r/min	Airflow	Airflow m³/s @ Static Pressure Pa.					Motor Electrical Data			A.V. Mounts
			0	25	50	75	100	FLC Amps	SC Amps	Output kW	
SB250-CON4-1	1450	m³/s	0.28	0.22	0.15	0.03		1.13	3.73	0.12	S1G
SB315-CON4-1	1370	m³/s	0.52	0.48	0.43	0.38	0.23	1.13	3.73	0.12	S2B

THREE Phase - 380V-415V / 50Hz

Product Code	Speed r/min	Airflow	Airflow m³/s @ Static Pressure Pa.											Motor Electrical Data			A.V. Mounts
			0	25	50	75	100	150	200	250	300	400	500	600	FLC Amps	SC Amps	Output kW	
SB250-CON2-3	2780	m³/s	0.57	0.53	0.50	0.47	0.44	0.36	0.28	0.20					0.68	3.06	0.25	S1G
SB250-CON4-3	1370	m³/s	0.27	0.21	0.14	0.04									0.48	2.40	0.12	S1G
SB315-CON2-3	2800	m³/s	0.93	0.92	0.91	0.90	0.88	0.84	0.80	0.76	0.71	0.55			1.18	6.14	0.55	S2B
SB315-CON4-3	1370	m³/s	0.52	0.48	0.43	0.37	0.25								0.48	2.40	0.12	S2B
SB400-CON2-3	2840	m³/s	2.08	2.07	2.05	2.02	2.00	1.96	1.92	1.86	1.82	1.70	1.53		4.42	27.4	2.2	S2G
SB500-CON2-3	2900	m³/s	3.80	3.78	3.76	3.73	3.71	3.66	3.60	3.54	3.46	3.30	3.15	2.90	7.49	57.4	4.0	S2

Performance Curves

SINGLE Phase - 4 Pole

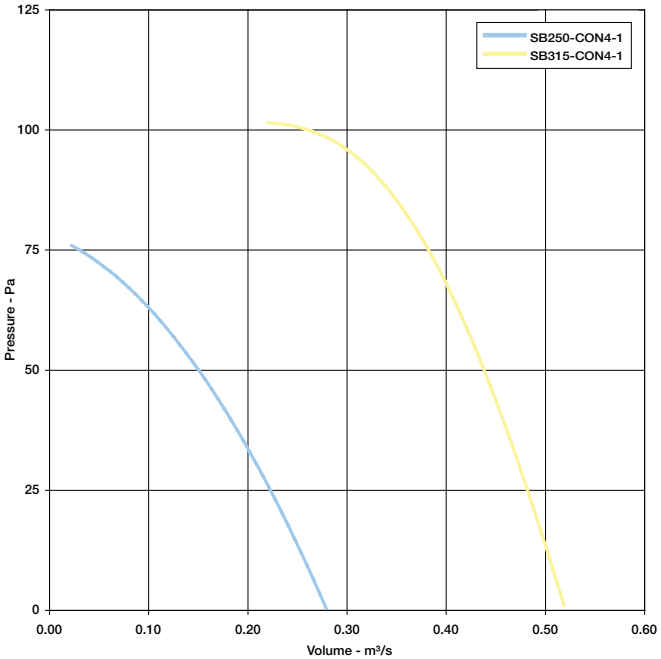

Biflow SB (CON)

Performance Curves

THREE Phase - 2 Pole

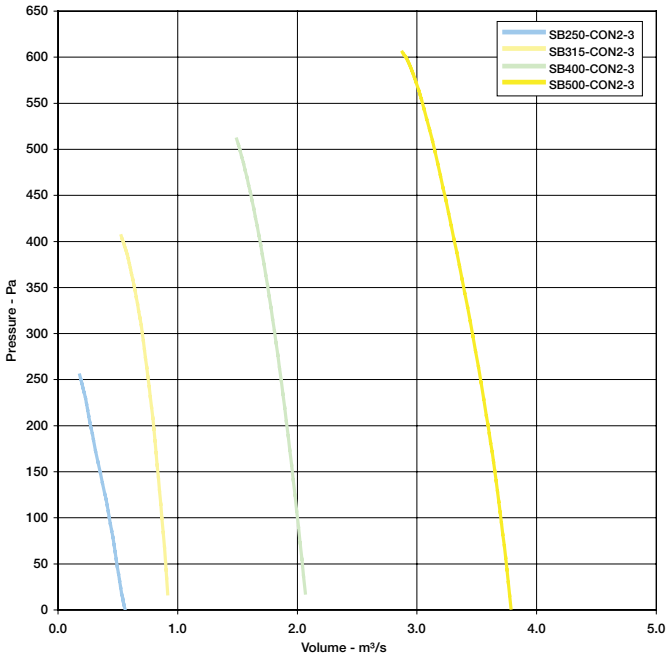

THREE Phase - 4 Pole

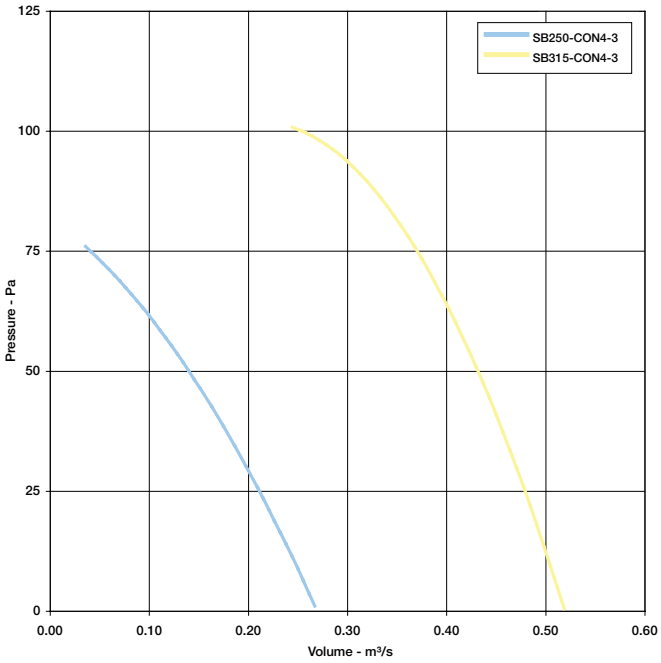

Sound Data

SINGLE Phase - 220-240V / 50Hz

Product Code	In-duct Sound Power Level dBW @ Octave Band Hz								dBA @ 3m
	63Hz	125Hz	250Hz	500Hz	1 kHz	2 kHz	4 kHz	8 kHz	
SB250-CON4-1	77	74	71	64	62	60	57	47	48
SB315-CON4-1	80	77	74	68	66	64	62	53	51

THREE Phase - 380V-415V / 50Hz

Product Code	In-duct Sound Power Level dBW @ Octave Band Hz								dBA @ 3m
	63Hz	125Hz	250Hz	500Hz	1 kHz	2 kHz	4 kHz	8 kHz	
SB250-CON2-3	83	81	79	78	77	75	73	69	61
SB250-CON4-3	77	74	71	64	62	60	57	47	48
SB315-CON2-3	90	86	82	81	80	77	77	71	64
SB315-CON4-3	80	77	74	68	66	64	62	53	51
SB400-CON2-3	94	87	86	90	84	83	80	73	70
SB500-CON2-3	98	93	90	96	96	95	93	89	80

Tests and preparation of the sound data have been carried out in accordance with BS 848 Part 2:1985 at 50% peak pressure.
The In-duct Sound Power Level Spectra are in dB re-1pW.
The overall A-weighted sound pressure level is at a distance of 3m with spherical free-field propagation. It is expressed in dB re-20µPa and is presented for comparative purposes only.

Biflow SB (CON)

Dimensional Data

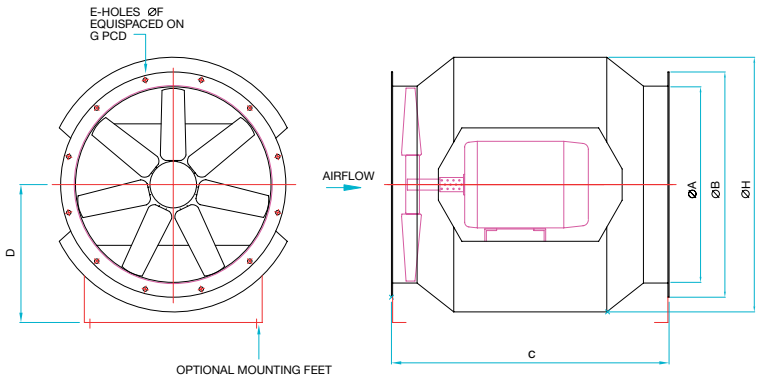

Product Code	A	B	C	D	E	F	G	H	Weight kg	
									1Ph	3Ph
SB250	250	325	460	220	8	10	299	400	23	23
SB315	315	380	500	250	8	10	355	460	30	30
SB315-CON2-3	315	380	500	250	8	10	355	460	-	31
SB400	400	485	650	305	8	12	450	570	-	49
SB500	500	585	710	370	12	12	560	700	-	86

All dimensions are shown in mm.

Silencer Data

SINGLE Phase - 220-240V / 50Hz

Product Code	dBA Attenuation		ΔP (Pa) 1DEP	dBA Attenuation		ΔP (Pa) 2DEP
	1DENP	1DEP		2DENP	2DEP	
SB250-CON4-1	-9	-11	11	-14	-16	16
SB315-CON4-1	-8	-11	8	-13	-15	12

THREE Phase - 380V-415V / 50Hz

Product Code	dBA Attenuation		ΔP (Pa) 1DEP	dBA Attenuation		ΔP (Pa) 2DEP
	1DENP	1DEP		2DENP	2DEP	
SB250-CON2-3	-9	-13	14	-13	-15	22
SB250-CON4-3	-8	-11	8	-14	-16	16
SB315-CON2-3	-9	-14	28	-16	-15	44
SB315-CON4-3	-8	-11	8	-13	-15	12
SB400-CON2-3	-9	-11	64	-14	-15	103
SB500-CON2-3	-9	-16	81	-14	-19	130

Biflow SB (CON)

Wiring Data

Please see our Wiring Diagrams download on www.eltaselect.com for more information.

SINGLE Phase - 220-240V / 50Hz

Product Code	Wiring Diagram No.
SB250-CON4-1	152-521
SB315-CON4-1	152-521

THREE Phase - 380V-415V / 50Hz

Product Code	Wiring Diagram No.
SB250-CON2-3	152-600
SB250-CON4-3	152-600
SB315-CON2-3	152-600
SB315-CON4-3	152-600
SB400-CON2-3	152-600
SB500-CON2-3	152-600

Biflow SB (CON)

Accessories

Please see our Bifurcated Accessories download on www.eltaselect.com for more information.

SINGLE Phase - 220-240V / 50Hz

Product Code	Impeller Side Guard	Ancillary Pack	Mounting Feet (each)	Matching Flanges (each)	Flexible Connections (each)	AV Mounts (set of 4)	Damper	Bell Mouth Inlet
SB250-CON4-1	078C-0250-C	APK250SBCON/S1G	060B-0250-B	061B-0250-B	063-0250-PU250	062-S1G	019-0250-STD	241B-0250
SB315-CON4-1	078C-0315-C	APK315SBCON/S2B	060B-0315-B	061B-0315	063-0315-PU250	062-S2B	019-0315-STD	241B-0315

Product Code	Silencer 1D Podded	Silencer 1D Unpodded	Silencer 2D Podded	Silencer 2D Unpodded
SB250-CON4-1	068-0250-1DEP	068-0250-1DENP	068-0250-2DEP	068-0250-2DENP
SB315-CON4-1	068-0315-1DEP	068-0315-1DENP	068-0315-2DEP	068-0315-2DENP

THREE Phase - 380V-415V / 50Hz

Product Code	Impeller Side Guard	Ancillary Pack	Mounting Feet (each)	Matching Flanges (each)	Flexible Connections (each)	AV Mounts (set of 4)	Damper	Bell Mouth Inlet
SB250-CON2-3	078C-0250-C	APK250SBCON/S1G	060B-0250-B	061B-0250-B	063-0250-PU250	062-S1G	019-0250-STD	241B-0250
SB250-CON4-3	078C-0250-C	APK250SBCON/S1G	060B-0250-B	061B-0250-B	063-0250-PU250	062-S1G	019-0250-STD	241B-0250
SB315-CON2-3	078C-0315-C	APK315SBCON-S2B	060B-0315-B	061B-0315	063-0315-PU250	062-S2B	019-0315-STD	241B-0315
SB315-CON4-3	078C-0315-C	APK315SBCON/S2B	060B-0315-B	061B-0315	063-0315-PU250	062-S2B	019-0315-STD	241B-0315
SB400-CON2-3	078C-0400-C	APK400-SBCON/S2B	060B-0400-B	061B-0400	063-0400-PU250	062-S2B	019-0400-STD	241B-0400-BELL
SB500-CON2-3	078C-0500-C	APK500SBCON/S2G	060B-0500-B	061B-0500	063-0500-PU250	062-S2G	019-0500-STD	241B-0500-BELL

Product Code	Silencer 1D Podded	Silencer 1D Unpodded	Silencer 2D Podded	Silencer 2D Unpodded
SB250-CON2-3	068-0250-1DEP	068-0250-1DENP	068-0250-2DEP	068-0250-2DENP
SB250-CON4-3	068-0250-1DEP	068-0250-1DENP	068-0250-2DEP	068-0250-2DENP
SB315-CON2-3	068-0315-1DEP	068-0315-1DENP	068-0315-2DEP	068-0315-2DENP
SB315-CON4-3	068-0315-1DEP	068-0315-1DENP	068-0315-2DEP	068-0315-2DENP
SB400-CON2-3	068-0400-1DEP	068-0400-1DENP	068-0400-2DEP	068-0400-2DENP
SB500-CON2-3	068-0500-1DEP	068-0500-1DENP	068-0500-2DEP	068-0500-2DENP



BUILDING SERVICES

Tel: +44 (0) 1384 275800
Fax: +44 (0) 1384 275810
e-mail: bs@eltafans.co.uk

46 Third Avenue
Pensnett Trading Estate
Kingswinford, West Midlands
DY6 7US, United Kingdom

APPLIED TECHNOLOGY

Tel: +44 (0) 1489 566500
Fax: +44 (0) 1489 566555
e-mail: at@eltafans.co.uk

17 Barnes Wallis Road
Segnesworth East Industrial Estate
Fareham, Hampshire
PO15 5ST, United Kingdom

EXPORT

Tel: +44 (0) 1489 566500
Fax: +44 (0) 1489 566555
e-mail: export@eltafans.co.uk

17 Barnes Wallis Road
Segnesworth East Industrial Estate
Fareham, Hampshire
PO15 5ST, United Kingdom

www.eltafans.com

BS EN ISO 9001:2008
FM 556465

A member of
HEVAC ASSOCIATION

CIBSE
PATRONS

A member of ELTA GROUP LIMITED