DAIKIN

EEDEN09-100

technical data

RZQ100-140BW1

air conditioning systems

R-410A

Split Sky Air

Split - Sky Air



Daikin's unique position as a manufacturer of air conditioning equipment, compressors and refrigerants has led to its close involvement in environmental issues. For several years Daikin has had the intention to become a leader in the provision of products that have limited impact on the environment. This challenge demands the eco design and development of a wide range of products and an energy management system, resulting in energy conservation and a reduction of waste.

Het ISO14001 assures an effective environmental management system in order to help protect human health and the environment from potential impact of our activities, products and services and to assist in maintaining and improving the quality of the environment.

Daikin Europe N.V. is approved by LRQA for its Quality Management System in accordance with the ISO9001 standard. ISO9001 pertains to quality assurance regarding design, development, manufacturing as well as to services related to the product.

Daikin units comply with the European regulations that guarantee the safety of the product.

Daikin Europe N.V. participates in the Eurovent Certification Programme for Air Conditioners (AC), Liquid Chilling Packages (LCP) and Fan Coil Units (FC); the certified data of certified models are listed in the Eurovent Directory.

" The present publication is drawn up by way of information only and does not constitute an offer binding upon Daikin Europe N.V.. Daikin Europe N.V. has compiled the content of this publication to the best of its knowledge. No express or implied warranty is given for the completeness, accuracy, reliability or fitness for particular purpose of its content and the products and services presented therein. Specifications are subject to change without prior notice. Daikin Europe N.V. explicitly rejects any liability for any direct or indirect damage, In the broadest sense, arising from or related to the use and/or interpretation of this publication. All content is copyrighted by Daikin Europe N.V.."

DAIKIN EUROPE N.V.

Naamloze Vennootschap

Zandvoordestraat 300

B-8400 Ostend, Belgium

www.daikin.eu

BTW: BE 0412 120 336

RPR Oostende

EEDEN09-100

EEDEN09-100 - 02/2009
Printed in Belgium by Goekint Graphics
Copyright © Daikin

DAIKIN

EEDEN09-100

technical data

air conditioning systems

RZQ100-140BW1

R-410A

Split Sky Air

TABLE OF CONTENTS

RZQ100-140B8W1B

1 Features 5

2 Specifications 6
Nominal Capacity and Nominal Input 6
Technical Specifications 7
Electrical Specifications 8

3 Electrical data 9

4 Options 11

5 Capacity tables 12
Combination table 12
Cooling capacity tables 13
Heating capacity tables 18

6 Dimensional drawing & centre of gravity 22
Dimensional drawing 22
Centre of gravity 23

7 Piping diagram 24

8 Wiring diagram 26
Wiring diagram 26

9 Sound data 27
Sound pressure spectrum 27
Sound power spectrum 29

10 Installation 30
Installation method 30

11 Operation range 31

1 Features

- Outdoor units for pair, twin, triple, double twin application
- The Sky Air Inverter is developed for use in shops, restaurants and small offices. This innovative Daikin unit provides a more comfortable environment and offers great savings in energy consumption to shop and office owners.
- The use of inverter type outdoor units results in an air conditioning system with a high energy efficiency and very low sound level
- An inverter driven compressor allows the capacity to be adjusted precisely to match variations in room and outside temperatures.
- During start up, the room can be cooled down or heated very quickly. Once the temperature in the room has reached its set point, the low power operation starts to save energy.
- Daikin outdoor units are neat and sturdy and can be mounted easily on a roof or terrace or simply placed against an outside wall.
- Outdoor units are fitted with either a swing or scroll compressor, renowned for low noise and high energy efficiency
- A special acryl precoated fin for anti-corrosion treatment on the heat exchanger ensures greater resistance against severe weather conditions



2 Specifications

2-1 NOMINAL CAPACITY AND NOMINAL INPUT				RZQ100B8W1B	RZQ125B8W1B	RZQ140B8W1B
For combination indoor units + outdoor units	Indoor Units			FCQ100C7VEB	FCQ125C7VEB	FCQ140C7VEB
Cooling capacity	Standard	kW		10.0	12.50	14.00
Heating capacity	Standard	kW		11.20	14.00	16.00
Power Input	Cooling	Standard	kW	2.640	3.880	5.36
	Heating	Standard	kW	3.140	4.360	5.69
For combination indoor units + outdoor units	EER	Nominal		3.79	3.22	2.61
	COP	Nominal		3.57	3.21	2.81
	Energy Label	Cooling		A	A	D
		Heating		B	C	D
	Annual energy consumption		kWh	1320	1940	2680
	Indoor Units			FBQ100C7VEB	FBQ125C7VEB	FBQ140C7VEB
Cooling capacity	Standard	kW		10.00	12.50	14.00
Heating capacity	Standard	kW		11.20	14.00	16.00
Power Input	Cooling	Standard	kW	2.78	3.91	4.70
	Heating	Standard	kW	2.79	3.69	4.40
For combination indoor units + outdoor units	EER	Nominal		3.60	3.20	2.98
	COP	Nominal		4.01	3.79	3.64
	Energy Label	Cooling		A	B	C
		Heating		A		
	Annual energy consumption		kWh	1,390	1,955	2,350
	Indoor Units			FHQ100BVV1B	FHQ125BVV1B	FCQH140D7VEB
Cooling capacity	Standard	kW		10.00	12.50	14.00
Heating capacity	Standard	kW		11.20	14.00	16.00
Power Input	Cooling	Standard	kW	3.150	4.450	4.640
	Heating	Standard	kW	3.600	4.500	4.480
For combination indoor units + outdoor units	EER	Nominal		3.17	2.81	3.02
	COP	Nominal		3.11	3.11	3.57
	Energy Label	Cooling		B	C	B
		Heating		D	D	B
	Annual energy consumption		kWh	1575	2225	2,325
	Indoor Units			FUQ100BVV1B	FUQ125BVV1B	
Cooling capacity	Standard	kW		10.00	12.50	
Heating capacity	Standard	kW		11.20	14.00	
Power Input	Cooling	Standard	kW	3.120	4.050	
	Heating	Standard	kW	3.280	4.360	
For combination indoor units + outdoor units	EER	Nominal		3.21	3.09	
	COP	Nominal		3.41	3.21	
	Energy Label	Cooling		A	B	
		Heating		B	C	
	Annual energy consumption		kWh	1560	2025	
	Indoor Units			FAQ100BVV1B	FDQ125B8V3B9	
Cooling capacity	Standard	kW		10.00	12.50	
Heating capacity	Standard	kW		11.20	14.00	
Power Input	Cooling	Standard	kW	2.780	4.150	
	Heating	Standard	kW	3.390	3.690	
For combination indoor units + outdoor units	EER	Nominal		3.60	3.01	
	COP	Nominal		3.30	3.79	
	Energy Label	Cooling		A	B	
		Heating		C	A	
	Annual energy consumption		kWh	1390	2075	
	Indoor Units			FCQH100D7VEB	FCQH125D7VEB	
Cooling capacity	Standard	kW		10.00	12.50	
Heating capacity	Standard	kW		11.20	14.00	
Power Input	Cooling	Standard	kW	2.430	3.530	
	Heating	Standard	kW	2.530	3.570	

2 Specifications

2-1 NOMINAL CAPACITY AND NOMINAL INPUT				RZQ100B8W1B	RZQ125B8W1B	RZQ140B8W1B
For combination indoor units + outdoor units	EER	Nominal		4.12	3.54	
	COP	Nominal		4.43	3.92	
	Energy Label	Cooling		A	A	
		Heating		A	A	
	Annual energy consumption		kWh	1,220	1,770	

2

2-2 TECHNICAL SPECIFICATIONS				RZQ100B8W1B	RZQ125B8W1B	RZQ140B8W1B
Casing	Colour			Ivory White		
	Material			Painted galvanised steel		
Dimensions	Unit	Height	mm	1345	1345	1345
		Width	mm	900	900	900
		Depth	mm	320	320	320
	Packing	Height	mm	1524	1524	1524
		Width	mm	980	980	980
		Depth	mm	420	420	420
Weight	Unit		kg	106	106	106
	Packed Unit		kg	112	112	112
Heat Exchanger	Dimensions	Length	mm	857	857	857
		Nr of Rows		2	2	2
		Fin Pitch	mm	1.40	1.40	1.40
		Nr of Passes		5	5	5
		Face Area	m^2	1.131	1.131	1.131
		Nr of Stages		60	60	60
	Tube type			Hi-XSS(8)		
	Fin	Type		WF fin		
		Treatment		Anti-corrosion treatment (PE)		
Fan	Type			Propeller		
	Discharge direction			Horizontal		
	Quantity			2	2	2
	Air Flow Rate (nominal at 230V)	Cooling	m^3/min	103.0	99.0	99.0
		Heating	m^3/min	101.0	100.0	100.0
	Motor	Quantity		2	2	2
		Model		KFD-325-70-8A		
Motor	Speed (nominal)	Steps		8	8	8
		Cooling (Standard)	rpm	789	782	782
		Heating (Standard)	rpm	775	767	767
Fan	Motor	Output	W	70	70	70
Compressor	Quantity			1	1	1
	Motor	Model		JT1G-VDYR@T		
		Type		Hermetically sealed scroll compressor		
		Motor Output	W	2200	2200	2200
		Crankcase Heater	W	33	33	33
Operation Range	Cooling	Min	°CDB	-15.0	-15.0	-15.0
		Max	°CDB	50.0	50.0	50.0
	Heating	Min	°CWB	-20.0	-20.0	-20.0
		Max	°CWB	15.5	15.5	15.5
Sound Level (nominal)	Cooling	Sound Power	dBA	65.0	66.0	66.0
		Sound Pressure (Standard)	dBA	49.0	50.0	50.0
	Heating	Sound Pressure (Standard)	dBA	51.0	52.0	52.0
Sound Level (Night quiet)	Sound Pressure		dBA	45.0	45.0	45.0

2 Specifications

2-2 TECHNICAL SPECIFICATIONS				RZQ100B8W1B	RZQ125B8W1B	RZQ140B8W1B
Refrigerant	Type			R-410A		
	Charge		kg	4.30	4.30	4.30
	Control			Expansion valve (electronic type)		
	Nr of Circuits			1	1	1
Refrigerant Oil	Type			Daphne FVC68D		
	Charged Volume		l	1.0	1.0	1.0
Piping connections	Liquid (OD)	Quantity		1	1	1
		Type		Flare connection		
		Diameter (OD)	mm	9.52	9.52	9.52
	Gas	Quantity		1	1	1
		Type		Flare connection		
		Diameter (OD)	mm	15.9	15.9	15.9
	Drain	Quantity		3	3	3
		Type		Hole		
		Diameter (OD)	mm	26	26	26
	Piping Length	Minimum	m	5	5	5
		Maximum	m	75	75	75
		Equivalent	m	95	95	95
		Chargeless	m	30	30	30
	Additional Refrigerant Charge		kg/m	see installation manual 4PW21412-1		
	Installation height difference	Maximum	m	30.0	30.0	30.0
	Max. internunit level difference		m	0.5	0.5	0.5
	Heat Insulation			Both liquid and gas pipes		
Defrost Method				Pressure equalising		
Defrost Control				Sensor for outdoor heat exchanger temperature		
Capacity Control Method				Inverter controlled		
Safety Devices				High pressure switch		
				Fan motor thermal protector		
				Fuse		
Standard Accessories	Item			Tie-wraps		
	Quantity			2	2	2
	Item			Installation manual		
	Quantity			1	1	1
Notes				Nominal cooling capacities are based on : indoor temperature : 27°CDB, 19°CWB, outdoor temperature : 35°CDB, equivalent refrigerant piping : 7.5m, level difference : 0m.		
				Nominal heating capacities are based on : indoor temperature : 20°CDB, outdoor temperature : 7°CDB, 6°CWB, equivalent refrigerant piping : 7.5m, level difference : 0m		

2-3 ELECTRICAL SPECIFICATIONS				RZQ100B8W1B	RZQ125B8W1B	RZQ140B8W1B
Power Supply	Name			W1B		
	Phase			3N~		
	Frequency		Hz	50	50	50
	Voltage		V	400	400	400
	Voltage range	Minimum	V	-10%		
		Maximum	V	+10%		
Current	Recomended fuses		A	20	20	20
Wiring connections	For Power Supply	Remark		see installation manual 4PW21412-1		
	For connection with indoor	Remark		see installation manual 4PW21412-1		
Power Supply Intake				Outdoor unit only		
Notes				See separate drawings for electrical data		
				Power supply intake for FDQ is outdoor and indoor unit		

3 Electrical data

RZQ-BW1

Unit combination		Power supply					Comp.		OFM		IFM	
Indoor unit	Outdoor unit	Hz-volts	Voltage range	MCA	TOCA	MFA	MSC	RLA	kW	FLA	kW	FLA
FCQH100C7VEB	RZQ100B8W1B	50-400		14.9	14.9	20	12.9	12.9	0.07+0.07	0.3+0.3	0.120	1.4
FCQ100C7VEB	RZQ100B8W1B	50-400		14.2	14.2	20	12.9	12.9	0.07+0.07	0.3+0.3	0.120	0.7
FCQ50C7VEBx2	RZQ100B8W1B	50-400		14.1	14.1	20	12.9	12.9	0.07+0.07	0.3+0.3	0.056x2	0.3x2
FCQ35C7VEBx3	RZQ100B8W1B	50-400		14.4	14.4	20	12.9	12.9	0.07+0.07	0.3+0.3	0.056x3	0.3x3
FCQ100DV3B	RZQ100B7W1B	50-400		14.2	14.2	20	12.9	12.9	0.07+0.07	0.3+0.3	0.120	0.7
FCQ100B7V3B	RZQ100B7W1B	50-400		14.5	14.5	20	12.9	12.9	0.07+0.07	0.3+0.3	0.090	1.0
FCQ50B7V1x2	RZQ100B7W1B	50-400		14.7	14.7	20	12.9	12.9	0.07+0.07	0.3+0.3	0.045x2	0.6x2
FCQ35B7V1x3	RZQ100B7W1B	50-400		15.3	15.3	20	12.9	12.9	0.07+0.07	0.3+0.3	0.045x3	0.6x3
FFQ50BV1Bx2	RZQ100B7W1B	50-400	Max. 50Hz440V	14.9	14.9	20	12.9	12.9	0.07+0.07	0.3+0.3	0.055x2	0.7x2
FFQ35BV1Bx3	RZQ100B7W1B	50-400	Min. 50Hz360V	15.3	15.3	20	12.9	12.9	0.07+0.07	0.3+0.3	0.055x3	0.6x3
FBQ100B7V3B	RZQ100B7W1B	50-400		14.5	14.5	20	12.9	12.9	0.07+0.07	0.3+0.3	0.135	1.0
FBQ50B7V1x2	RZQ100B7W1B	50-400		14.9	14.9	20	12.9	12.9	0.07+0.07	0.3+0.3	0.085x2	0.7x2
FBQ35B7V1x3	RZQ100B7W1B	50-400		15.0	15.0	20	12.9	12.9	0.07+0.07	0.3+0.3	0.065x3	0.5x3
FHQ100BUV1B	RZQ100B7W1B	50-400		14.2	14.2	20	12.9	12.9	0.07+0.07	0.3+0.3	0.130	0.7
FHQ50BUV1Bx2	RZQ100B7W1B	50-400		14.7	14.7	20	12.9	12.9	0.07+0.07	0.3+0.3	0.062x2	0.6x2
FHQ35BUV1Bx3	RZQ100B7W1B	50-400		15.3	15.3	20	12.9	12.9	0.07+0.07	0.3+0.3	0.062x3	0.6x3
FAQ100BUV1B	RZQ100B7W1B	50-400		13.9	13.9	20	12.9	12.9	0.07+0.07	0.3+0.3	0.049	0.4
FUQ100BUV1B	RZQ100B7W1B	50-400		14.6	14.6	20	12.9	12.9	0.07+0.07	0.3+0.3	0.090	1.1
FCQH125C7VEB	RZQ125B8W1B	50-400		14.9	14.9	20	12.9	12.9	0.07+0.07	0.3+0.3	0.120	1.4
FCQ125C7VEB	RZQ125B8W1B	50-400		14.5	14.5	20	12.9	12.9	0.07+0.07	0.3+0.3	0.120	1.0
FCQ60C7VEBx2	RZQ125B8W1B	50-400		14.3	14.3	20	12.9	12.9	0.07+0.07	0.3+0.3	0.056x2	0.4x2
FCQ50C7VEBx3	RZQ125B8W1B	50-400		14.4	14.4	20	12.9	12.9	0.07+0.07	0.3+0.3	0.056x3	0.3x3
FCQ35C7VEBx4	RZQ125B8W1B	50-400		14.7	14.7	20	12.9	12.9	0.07+0.07	0.3+0.3	0.056x4	0.3x4
FCQ125DV3B	RZQ125B7W1B	50-400		14.2	14.2	20	12.9	12.9	0.07+0.07	0.3+0.3	0.120	0.7
FCQ125B7V3B	RZQ125B7W1B	50-400		14.5	14.5	20	12.9	12.9	0.07+0.07	0.3+0.3	0.090	1.0
FCQ60B7V1x2	RZQ125B7W1B	50-400		14.7	14.7	20	12.9	12.9	0.07+0.07	0.3+0.3	0.045x2	0.6x2
FCQ50B7V1x3	RZQ125B7W1B	50-400		15.3	15.3	20	12.9	12.9	0.07+0.07	0.3+0.3	0.045x3	0.6x3
FCQ35B7V1x4	RZQ125B7W1B	50-400		15.9	15.9	20	12.9	12.9	0.07+0.07	0.3+0.3	0.045x4	0.6x4
FFQ60BV1Bx2	RZQ125B7W1B	50-400	Max. 50Hz440V	14.9	14.9	20	12.9	12.9	0.07+0.07	0.3+0.3	0.055x2	0.7x2
FFQ50BV1Bx3	RZQ125B7W1B	50-400	Min. 50Hz360V	15.6	15.6	20	12.9	12.9	0.07+0.07	0.3+0.3	0.055x3	0.7x3
FFQ35BV1Bx4	RZQ125B7W1B	50-400		15.9	15.9	20	12.9	12.9	0.07+0.07	0.3+0.3	0.055x4	0.6x4
FBQ125B7V3B	RZQ125B7W1B	50-400		14.9	14.9	20	12.9	12.9	0.07+0.07	0.3+0.3	0.225	1.4
FBQ60B7V1x2	RZQ125B7W1B	50-400		15.3	15.3	20	12.9	12.9	0.07+0.07	0.3+0.3	0.125x2	0.9x2
FBQ50B7V1x3	RZQ125B7W1B	50-400		15.6	15.6	20	12.9	12.9	0.07+0.07	0.3+0.3	0.085x3	0.7x3
FBQ35B7V1x4	RZQ125B7W1B	50-400		15.5	15.5	20	12.9	12.9	0.07+0.07	0.3+0.3	0.065x4	0.5x4
FHQ125BUV1B	RZQ125B7W1B	50-400		14.2	14.2	20	12.9	12.9	0.07+0.07	0.3+0.3	0.130	0.7
FHQ60BUV1Bx2	RZQ125B7W1B	50-400		14.7	14.7	20	12.9	12.9	0.07+0.07	0.3+0.3	0.062x2	0.6x2
FHQ50BUV1Bx3	RZQ125B7W1B	50-400		15.3	15.3	20	12.9	12.9	0.07+0.07	0.3+0.3	0.062x3	0.6x3
FHQ35BUV1Bx4	RZQ125B7W1B	50-400		15.9	15.9	20	12.9	12.9	0.07+0.07	0.3+0.3	0.062x4	0.6x4
FUQ125BUV1B	RZQ125B7W1B	50-400		14.6	14.6	20	12.9	12.9	0.07+0.07	0.3+0.3	0.090	1.1
FDQ125B7V3B	RZQ125B7W1B	50-400		17.7	17.7	20	12.9	12.9	0.07+0.07	0.3+0.3	0.500	4.2

3D048638C

SYMBOLS

MCA : Min. Circuit Amps (A)
TOCA : Total Over Current Amps (A)
MFA : Max. Fuse Amps (See note 7) (A)
MSC : MSC means the max. current during the starting of compressor. (A)
RLA : Rated Load Amps (A)
OFM : Outdoor Fan Motor (A)
IFM : Indoor Fan Motor
FLA : Full Load Amps
kW : Fan Motor Rated Output (kW)

NOTES

1 RLA is based on the following conditions:
Power supply: 50Hz 230V
Cooling
Indoor temperature 27°CDB/19°CWB
Outdoor temperature 35°CDB
Heating
Indoor temperature 20.0°CDB
Outdoor temperature 7.0°CDB/6.0°CWB
2 TOCA means the total value of each OC set
3 Voltage range
Units are suitable for use on electrical systems where voltage supplied to unit terminals is not below or above listed operation range limits
4 Maximum allowable voltage unbalance between phases is 2%
5 MCA represents maximum input current., MFA represents capacity which may accept MCA (next lower standard fuse rating, min.15A)
6 Select wire size based on the larger value of MCA or TOCA
7 MFA is used to select the circuit breaker and the ground fault circuit interrupter (earth leakage circuit breaker)
8 For more details concerning conditional connections, see http://extranet.daikineurope.com, select "E-Data Books". Finally, click on the document title of your choice.

3 Electrical data

RZQ-BW1

Unit combination		Power supply					Comp.		OFM		IFM	
Indoor unit	Outdoor unit	Hz-volts	Voltage range	MCA	TOCA	MFA	MSC	RLA	kW	FLA	kW	FLA
FCQH140C7VEB	RZQ140B8W1B	50-400		14.9	14.9	20	12.9	12.9	0.07+0.07	0.3+0.3	0.120	1.4
FCQ140C7VEB	RZQ140B8W1B	50-400		14.5	14.5	20	12.9	12.9	0.07+0.07	0.3+0.3	0.120	1.0
FCQ71C7VEBx2	RZQ140B8W1B	50-400		14.5	14.5	20	12.9	12.9	0.07+0.07	0.3+0.3	0.056x2	0.5x2
FCQ50C7VEBx3	RZQ140B8W1B	50-400		14.4	14.4	20	12.9	12.9	0.07+0.07	0.3+0.3	0.056x3	0.3x3
FCQ35C7VEBx4	RZQ140B8W1B	50-400		14.7	14.7	20	12.9	12.9	0.07+0.07	0.3+0.3	0.056x4	0.3x4
FCQ140DV3B	RZQ140B7W1B	50-400		14.2	14.2	20	12.9	12.9	0.07+0.07	0.3+0.3	0.120	0.7
FCQ71B7V3Bx2	RZQ140B7W1B	50-400		14.7	14.7	20	12.9	12.9	0.07+0.07	0.3+0.3	0.045x2	0.6x2
FCQ50B7V1x3	RZQ140B7W1B	50-400	Max.50Hz440V	14.7	14.7	20	12.9	12.9	0.07+0.07	0.3+0.3	0.045x2	0.6x2
FCQ35B7V1x4	RZQ140B7W1B	50-400	Min.50Hz360V	15.9	15.9	20	12.9	12.9	0.07+0.07	0.3+0.3	0.045x4	0.6x4
FFQ50BV1Bx3	RZQ140B7W1B	50-400		15.6	15.6	20	12.9	12.9	0.07+0.07	0.3+0.3	0.055x3	0.7x3
FFQ35BV1Bx4	RZQ140B7W1B	50-400		15.9	15.9	20	12.9	12.9	0.07+0.07	0.3+0.3	0.055x4	0.6x4
FBQ71B7V3Bx2	RZQ140B7W1B	50-400		15.3	15.3	20	12.9	12.9	0.07+0.07	0.3+0.3	0.125x2	0.9x2
FBQ50B7V1x3	RZQ140B7W1B	50-400		15.6	15.6	20	12.9	12.9	0.07+0.07	0.3+0.3	0.085x3	0.7x3
FBQ35B7V1x4	RZQ140B7W1B	50-400		15.5	15.5	20	12.9	12.9	0.07+0.07	0.3+0.3	0.065x4	0.5x4
FHQ71BUV1Bx2	RZQ140B7W1B	50-400		14.7	14.7	20	12.9	12.9	0.07+0.07	0.3+0.3	0.062x2	0.6x2
FHQ50BUV1Bx3	RZQ140B7W1B	50-400		15.3	15.3	20	12.9	12.9	0.07+0.07	0.3+0.3	0.062x3	0.6x3
FHQ35BUV1Bx4	RZQ140B7W1B	50-400		15.9	15.9	20	12.9	12.9	0.07+0.07	0.3+0.3	0.062x4	0.6x4
FAQ71BUV1Bx2	RZQ140B7W1B	50-400		14.1	14.1	20	12.9	12.9	0.07+0.07	0.3+0.3	0.043x2	0.3x2
FUQ71BUV1Bx2	RZQ140B7W1B	50-400		14.9	14.9	20	12.9	12.9	0.07+0.07	0.3+0.3	0.045x2	0.7x2

3D048638C

SYMBOLS

MCA : Min. Circuit Amps (A)
TOCA : Total Over Current Amps (A)
MFA : Max. Fuse Amps (See note 7) (A)
MSC : MSC means the max. current during the starting of compressor. (A)
RLA : Rated Load Amps (A)
OFM : Outdoor Fan Motor (A)
IFM : Indoor Fan Motor
FLA : Full Load Amps
kW : Fan Motor Rated Output (kW)

NOTES

1 RLA is based on the following conditions:
Power supply: 50Hz 230V
Cooling
Indoor temperature 27°CDB/19°CWB
Outdoor temperature 35°CDB
Heating
Indoor temperature 20.0°CDB
Outdoor temperature 7.0°CDB/6.0°CWB
2 TOCA means the total value of each OC set
3 Voltage range
Units are suitable for use on electrical systems where voltage supplied to unit terminals is not below or above listed operation range limits
4 Maximum allowable voltage unbalance between phases is 2%
5 MCA represents maximum input current., MFA represents capacity which may accept MCA (next lower standard fuse rating, min.15A)
6 Select wire size based on the larger value of MCA or TOCA
7 MFA is used to select the circuit breaker and the ground fault circuit interrupter (earth leakage circuit breaker)
8 For more details concerning conditional connections, see http://extranet.daikineurope.com, select "E-Data Books". Finally, click on the document title of your choice.

4 Options

RZQ-B8

Name of option		Kit name			
		RZQ71D7V1B	RZQ100D7V1B	RZQ125D7V1B	RZQ140D7V1B
		RZQS71D7V1B	RZQS100D7V1B	RZQS125D7V1B	RZQS140D7V1B
		-	RZQ100B8W1B	RZQ125B8W1B	RZQ140B8W1B
Central drain plug		EKDK04			
Refrigerant branch piping	Twin	KHRQ22M20TA (KHRQ58T): see note			
	Triple	-	KHRQ127H (KHRQ58H): see note		
	Double-twin	-	-	KHRQ22M20TA (KHRQ58T): see note (3x)	
Demand adapter kit		KRP58M51			

NOTE

1 For RZQ100-140B8W1B in combination with FCQ35-71C, FCQH71C or FCQH71D use the refrigerant branch piping mentioned between brackets.

3TW26739-1F

5 Capacity tables

5 - 1 Combination table

RZQ-B

Multi Combination Possibilities:

P = Pair	71	100	125	140
2 = Twin	35+35	50+50	60+60	71+71
3 = Triple		35+35+35	50+50+50 (*)	50+50+50 (*)
4 = Double Twin			35+35+35+35 (*)	35+35+35+35

(*) Max capacity depend on outdoor unit

Sky-air		HH Cassette				Thin cassette							2x2 cassette			New Duct (medium ESP)							Ceiling suspended						4way ceiling			Wall mounted		High ESP Duct	Floor standing		
Model name		FCQH71D7VEB	FCQH100D7VEB	FCQH125D7VEB	FCQH140D7VEB	FCQ35C7VEB	FCQ50C7VEB	FCQ60C7VEB	FCQ71C7VEB	FCQ100C7VEB	FCQ125C7VEB	FCQ140C7VEB	FFQ35B8V1B	FFQ50B8V1B	FFQ60B8V1B	FBQ35C7VEB	FBQ50C7VEB	FBQ60C7VEB	FBQ71C7VEB	FBQ100C7VEB	FBQ125C7VEB	FBQ140C7VEB	FHQ35BVV1B	FHQ50BVV1B	FHQ60BVV1B	FHQ71BVV1B	FHQ100BVV1B	FHQ125BVV1B	FUQ71BVV1B	FUQ100BVV1B	FUQ125BVV1B	FAQ71BVV1B	FAQ100BVV1B	FDQ125B8V3B	FVQ71BV1B	FVQ100BV1B	FVQ125BV1B
RZQ71D7V1B	-	P				2			P				2			2			P				2			P			P			P					
RZQ100D7V1B	RZQ100B8W1B		P			3	2			P			3	2		3	2			P			3	2			P			P			P				
RZQ125D7V1B	RZQ125B8W1B			P		4	3	2			P		4	3	2	4	3	2			P		4	3	2			P			P			P			
RZQ140D7V1B	RZQ140B8W1B	2			P	4	3		2			P	4	3		4	3		2			P	4	3		2			2			2					

Sky-air		HH Cassette				Thin cassette							2x2 cassette			New Duct (medium ESP)							Ceiling suspended						4way ceiling			Wall mounted		High ESP Duct	Floor standing		
Model name		FCQH71D7VEB	FCQH100D7VEB	FCQH125D7VEB	FCQH140D7VEB	FCQ35C7VEB	FCQ50C7VEB	FCQ60C7VEB	FCQ71C7VEB	FCQ100C7VEB	FCQ125C7VEB	FCQ140C7VEB	FFQ35B8V1B	FFQ50B8V1B	FFQ60B8V1B	FBQ35C7VEB	FBQ50C7VEB	FBQ60C7VEB	FBQ71C7VEB	FBQ100C7VEB	FBQ125C7VEB	FBQ140C7VEB	FHQ35BVV1B	FHQ50BVV1B	FHQ60BVV1B	FHQ71BVV1B	FHQ100BVV1B	FHQ125BVV1B	FUQ71BVV1B	FUQ100BVV1B	FUQ125BVV1B	FAQ71BVV1B	FAQ100BVV1B	FDQ125B8V3B	FVQ71BV1B	FVQ100BV1B	FVQ125BV1B
RZQ71D7V1B		P				2			P				2			2			P				2			P						P			P		
RZQ100D7V1B			P			3	2			P			3	2		3	2			P			3	2			P						P				P	
RZQ125D7V1B				P		4	3	2			P		4	3	2	4	3	2			P		4	3	2			P						P				P
RZQ140D7V1B		2			P	4	3		2			P	4	3		4	3		2			P	4	3		2			2			2					

NOTES

1 Individual indoor capacities are not given because the combinations are for simultaneous operation (= indoor units installed in the same room)
2 When different indoor models are used in combination, designate the remote control that is equipped with the most function as the main unit.

3TW26739-2C

5 Capacity tables

5 - 2 Cooling capacity tables

RZQ100B (Pair + Twin / triple)

Cooling

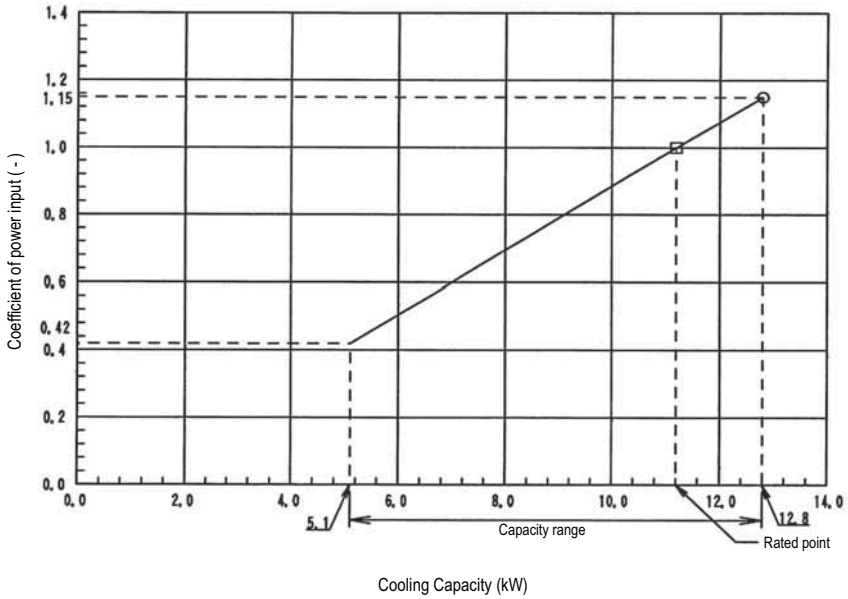

Cooling

Indoor		Outdoor temperature (°C DB)											
EWB °C	EDB °C	25			30			35			40		
		TC (kW)	SHC (kW)	CPI (-)	TC (kW)	SHC (kW)	CPI (-)	TC (kW)	SHC (kW)	CPI (-)	TC (kW)	SHC (kW)	CPI (-)
16.0	22	10.2	6.93	0.86	10.2	7.00	1.01	10.5	7.29	1.12	10.1	7.08	1.23
18.0	25	11.8	7.59	0.94	11.3	7.45	1.03	11.0	7.27	1.13	10.5	7.06	1.24
19.0	27	12.0	7.57	0.95	11.6	7.43	1.03	11.2	7.26	1.13	10.8	7.04	1.24
19.5	27	12.1	7.56	0.95	11.8	7.41	1.03	11.3	7.25	1.13	10.9	7.03	1.24
22.0	30	12.7	7.46	0.96	12.3	7.32	1.04	11.9	7.16	1.14	11.4	6.96	1.25
24.0	32	13.2	7.36	0.96	12.8	7.22	1.05	12.4	7.06	1.15	11.9	6.87	1.27

3TW28121-1A

NOTES

1 Ratings shown are net capacities which include a deduction for indoor fan motor heat.
2 On the figure the mark with ◯ show the max, onces at standard conditions.
On the figure the mark with ▭ show rated capacity and rated coefficient of power input.
However the max. Capacity is not guaranteed ecxept at standard condition.
3 SHC is based on each EWB and EDB.
SHC for other dry bulb temperature = SHC + SHC*.
SHC* = SHC correction for other dry bulb.
= 0.02 x AFR (m^3/min.) x (1-BF) x (DB*-EDB)
Add SHC to SHC*.
4 Capacities are based on the following conditions.
Outdoor air: 85% RH.
However, the condition rated capacity is 7°C DB / 6°C WB. (heating)
Corresponding refrigerant piping length : 5.0m
Level difference : 0m
5 Coefficient of power input is the percentage when the rated value is defined as 1.00.
6 The value contains less than 5% error acording to indoor unit type.
7 Air flow rate and (BF) are given in table below:

(Pair)

	FCQH100D	FCQ100C	FCQ100D	FCQ100B	FBQ100B	FBQ100C	FHQ100	FAQ100	FUQ100
AFR (BF)	34 (0.17)	23.5 (0.16)	30 (0.11)	28 (0.16)	27 (0.20)	32 (0.14)	24 (0.14)	23 (0.10)	29 (0.07)

(Twin)

	FCQ50Cx2	FCQ50Bx2	FFQ50x2	FBQ50Bx2	FBQ50Cx2	FHQ50x2
AFR (BF)	12.5x2 (0.21x2)	15x2 (0.16x2)	12x2 (0.16x2)	14x2 (0.15x2)	16x2 (0.16x2)	13x2 (0.1x2)

(Triple)

	FCQ35Cx3	FCQ35Bx3	FFQ35x3	FBQ35Bx3	FBQ35Cx3	FHQ35x3
AFR (BF)	10.5x3 (0.28x3)	14x3 (0.16x3)	10x3 (0.25x3)	11.5x3 (0.15x3)	16x3 (0.15x3)	13x3 (0.2x3)

8 Rated power input of each model is tabulated below.

(Pair)

	FCQH100C	FCQ100C	FCQ100D	FCQ100B	FBQ100B	FBQ100C	FHQ100	FAQ100	FUQ100
Cooling	2.43	2.64	2.44	2.64	2.86	2.78	3.15	2.78	3.12

(Twin)

	FCQ50Cx2	FCQ50Bx2	FFQ50x2	FBQ50Cx2	FBQ50x2	FHQ50x2
Cooling	2.78	2.78	2.79	3.01	2.91	3.32

(Triple)

	FCQ35Cx3	FCQ35Bx3	FFQ35x3	FBQ35x3	FBQ35Cx3	FHQ35x3
Cooling	2.78	2.78	2.79	3.01	2.91	3.32

SYMBOLS

AFR	:	Air flow rate	(m3/min.)
BF	:	Bypass factor	
EWB	:	Entering wet bulb temp.	(°C WB)
EDB	:	Entering dry bulb temp.	(°C DB)
TC	:	Total cooling capacity	(kW)
SHC	:	Sensible heat capacity	(kW)
PI	:	Power input (Comp.+indoor+outdoor fan motor).	
CPI	:	Coefficient of power input	(-)

Caution TC and SHC are shown by kW.

5 Capacity tables

5 - 2 Cooling capacity tables

RZQ125B (Pair + Twin / triple / double twin)

Cooling

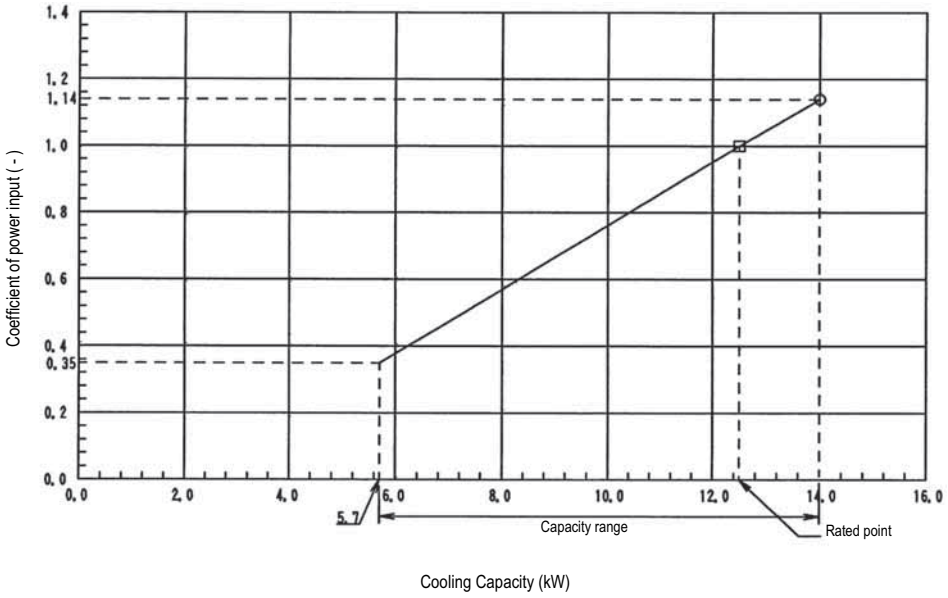

Cooling

Indoor		Outdoor temperature (°C DB)											
EWB °C	EDB °C	25			30			35			40		
		TC (kW)	SHC (kW)	CPI (-)	TC (kW)	SHC (kW)	CPI (-)	TC (kW)	SHC (kW)	CPI (-)	TC (kW)	SHC (kW)	CPI (-)
16.0	22	12.8	8.66	0.87	12.8	8.75	1.01	13.1	9.12	1.13	12.7	8.85	1.24
18.0	25	14.7	9.50	0.95	14.2	9.32	1.04	13.7	9.09	1.14	13.2	8.83	1.25
19.0	27	14.9	9.46	0.96	14.4	9.28	1.04	14.0	9.06	1.14	13.4	8.80	1.25
19.5	27	15.1	9.45	0.96	14.7	9.27	1.04	14.1	9.05	1.14	13.6	8.79	1.25
22.0	30	15.9	9.33	0.97	15.5	9.16	1.05	14.9	8.95	1.15	14.3	8.69	1.27
24.0	32	16.5	9.20	0.97	16.0	9.03	1.06	15.5	8.83	1.16	14.9	8.59	1.28

3TW28131-1A

NOTES

1 Ratings shown are net capacities which include a deduction for indoor fan motor heat.
2 On the figure the mark with ◯ show the max, onces at standard conditions.
On the figure the mark with ▭ show rated capacity and rated coefficient of power input.
However the max. Capacity is not guaranteed except at standard condition.
3 SHC is based on each EWB and EDB.
SHC for other dry bulb temperature = SHC + SHC*.
SHC* = SHC correction for other dry bulb.
= 0.02 x AFR (m^3/min.) x (1-BF) x (DB*-EDB)
Add SHC to SHC*.
4 Capacities are based on the following conditions.
Outdoor air: 85% RH.
However, the condition rated capacity is 7°C DB / 6°C WB. (heating)
Corresponding refrigerant piping length : 5.0m
Level difference : 0m
5 Coefficient of power input is the percentage when the rated value is defined as 1.00.
6 The value contains less than 5% error acording to indoor unit type.
7 Air flow rate and (BF) are given in table below:

(Pair)

	FCQH125D	FCQ125C	FCQ125D	FCQ125B	FBQ125B	FBQ125C	FHQ125	FUQ125	FDQ125
AFR (BF)	34 (0.19)	27.5 (0.19)	30 (0.13)	31 (0.07)	35 (0.14)	39 (0.16)	30 (0.13)	32 (0.07)	45 (0.25)

(Triple)

	FCQ50Cx3	FCQ50Bx3	FFQ50x3	FBQ50Bx3	FBQ50Cx3	FHQ50x3
AFR (BF)	12.5x3 (0.21x3)	15x3 (0.16x3)	12x3 (0.16x3)	14x3 (0.15x3)	16x3 (0.16x3)	13x3 (0.1x3)

(Twin)

	FCQ60Cx2	FCQ60Bx2	FFQ60x2	FBQ60Bx2	FBQ60Cx2	FHQ60x2
AFR (BF)	13.5x2 (0.21x2)	18x2 (0.1x2)	15x2 (0.11x2)	19x2 (0.11x2)	18x2 (0.15x2)	17x2 (0.2x2)

(Double Twin)

	FCQ35Cx4	FCQ35Bx4	FFQ35x4	FBQ35Bx4	FBQ35Cx4	FHQ35x4
AFR (BF)	10.5x4 (0.28x4)	14x4 (0.16x4)	10x4 (0.25x4)	11.5x4 (0.11x4)	16x4 (0.15x4)	13x4 (0.2x4)

8 Rated power input of each model is tabulated below.

(Pair)

	FCQH125D	FCQ125C	FCQ125D	FCQ125B	FBQ125B	FBQ125C	FHQ125	FUQ125	FDQ125
Cooling	3.53	3.88	3.54	3.88	3.98	3.91	4.45	4.05	4.15

(Triple)

	FCQ50Cx3	FCQ50Bx3	FFQ50x3	FBQ50Bx3	FBQ50Cx3	FHQ50x3
Cooling	4.08	4.08	4.13	4.19	4.12	4.45

(Twin)

	FCQ60Cx2	FCQ60Bx2	FFQ60x2	FBQ60Bx2	FBQ60Cx2	FHQ60x2
Cooling	4.08	4.08	4.13	4.19	4.12	4.45

(Double twin)

	FCQ35Cx4	FCQ35Bx4	FFQ35x4	FBQ35Bx4	FBQ35Cx4	FHQ35x4
Cooling	4.08	4.08	4.13	4.19	4.12	4.45

SYMBOLS

AFR	:	Air flow rate	(m3/min.)
BF	:	Bypass factor	
EWB	:	Entering wet bulb temp.	(°C WB)
EDB	:	Entering dry bulb temp.	(°C DB)
TC	:	Total cooling capacity	(kW)
SHC	:	Sensible heat capacity	(kW)
PI	:	Power input (Comp.+indoor+outdoor fan motor).	
CPI	:	Coefficient of power input	(-)

Caution TC and SHC are shown by kW.

5 Capacity tables

5 - 2 Cooling capacity tables

RZQ140B (Pair + Twin / triple / double twin)

Cooling

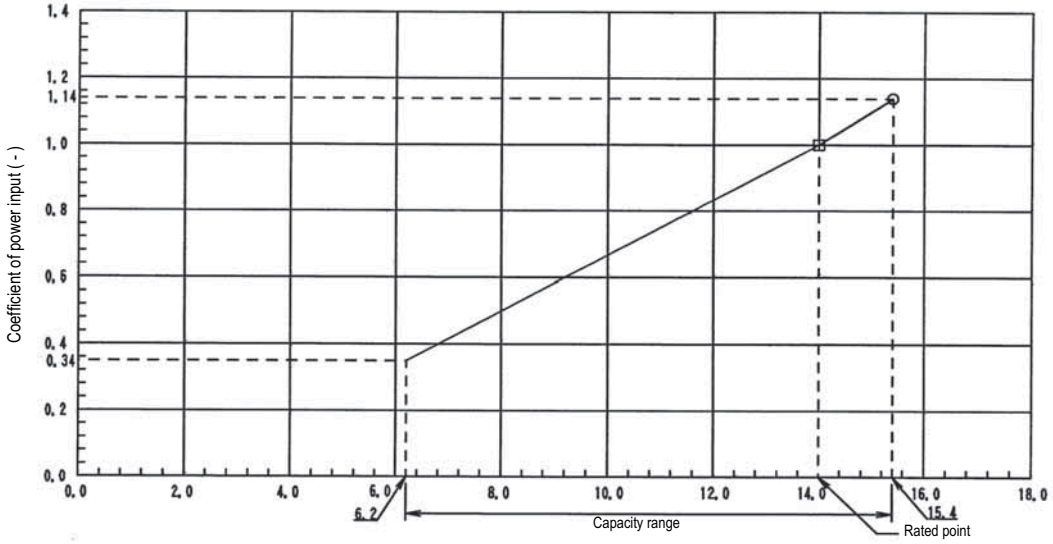

Cooling

Indoor		Outdoor temperature (°C DB)											
		25			30			35			40		
EWB °C	EDB °C	TC (kW)	SHC (kW)	CPI (-)	TC (kW)	SHC (kW)	CPI (-)	TC (kW)	SHC (kW)	CPI (-)	TC (kW)	SHC (kW)	CPI (-)
16.0	22	14.1	9.53	0.87	14.0	9.61	1.01	14.4	10.0	1.13	13.9	9.72	1.24
18.0	25	16.1	10.5	0.95	15.6	10.2	1.04	15.1	10.0	1.14	14.5	9.70	1.25
19.0	27	16.5	10.4	0.96	16.0	10.2	1.04	15.4	9.98	1.14	14.7	9.68	1.25
19.5	27	16.6	10.4	0.96	16.2	10.2	1.04	45.5	9.96	1.14	15.0	9.67	1.25
22.0	30	17.5	10.3	0.97	16.9	10.1	1.05	16.4	9.85	1.15	15.7	9.56	1.27
24.0	32	18.2	10.1	0.97	17.6	9.93	1.06	17.1	9.71	1.16	16.4	9.45	1.28

3TW28141-3A

NOTES

1 Ratings shown are net capacities which include a deduction for indoor fan motor heat.
2 On the figure the mark with ◯ show the max, onces at standard conditions.
On the figure the mark with ▭ show rated capacity and rated coefficient of power input.
However the max. Capacity is not guaranteed ecxept at standard condition.
3 SHC is based on each EWB and EDB.
SHC for other dry bulb temperature = SHC + SHC*.
SHC* = SHC correction for other dry bulb.
= 0.02 x AFR (m^3/min.) x (1-BF) x (DB*-EDB)
Add SHC to SHC*.
4 Capacities are based on the following conditions.
Outdoor air: 85% RH.
However, the condition rated capacity is 7°C DB / 6°C WB. (heating)
Corresponding refrigerant piping length : 5.0m
Level difference : 0m
5 Coefficient of power input is the percentage when the rated value is defined as 1.00.
6 The value contains less than 5% error acording to indoor unit type.
7 Air flow rate and (BF) are given in table below:

(Pair)

	FCQH140D	FCQ140C	FCQ140D	FBQ-C
AFR (BF)	34 (0.20)	27.5 (0.19)	30 (0.13)	39 (0.16)

(Triple)

	FCQ50Cx3	FCQ50Bx3	FFQ50x3	FBQ50Bx3	FBQ50Cx3	FHQ50x3
AFR (BF)	12.5x3 (0.21x3)	15x3 (0.16x3)	12x3 (0.16x3)	14x3 (0.15x3)	16x3 (0.16x3)	13x3 (0.1x3)

(Twin)

	FCQ71Cx2	FCQ71Bx2	FFQ71x2	FBQ71Bx2	FBQ71Cx2	FHQ71x2	FAQ71x2	FCQH140Dx2
AFR (BF)	15.5x2 (0.19x2)	18x2 (0.1x2)	19x2 (0.11x2)	18x2 (0.08x2)	17x2 (0.1x2)	19x2 (0.07x2)	19x2 (0.08x2)	21x2 (0.17x2)

(Double Twin)

	FCQ35Cx4	FCQ35Bx4	FFQ35x4	FBQ35Bx4	FBQ35Cx4	FHQ35x4
AFR (BF)	10.5x4 (0.28x4)	14x4 (0.16x4)	10x4 (0.25x4)	11.5x4 (0.15x4)	16x4 (0.15x4)	13x4 (0.2x4)

8 Rated power input of each model is tabulated below.

(Pair)

	FCQH140D	FCQ140C	FCQ140D	FCQ140B
Cooling	4.64	5.36	4.65	4.70

(Triple)

	FCQ50Cx3	FCQ50Bx3	FFQ50x3	FBQ50Bx3	FBQ50Cx3	FHQ50x3
Cooling	4.81	4.81	4.86	4.95	4.96	4.99

(Twin)

	FCQ71Cx2	FCQ71Bx2	FBQ71Bx2	FBQ71Cx2	FHQ71x2	FUQ71x2	FAQ71x2	FCQH250Dx2
Cooling	4.81	4.81	4.95	4.96	4.99	4.99	4.92	4.90

(Double twin)

	FCQ35Cx4	FCQ35Bx4	FFQ35x4	FBQ35Bx4	FBQ35Cx4	FHQ35x4
Cooling	4.81	4.81	4.86	4.95	4.96	4.99

SYMBOLS

AFR	:	Air flow rate	(m3/min.)
BF	:	Bypass factor	
EWB	:	Entering wet bulb temp.	(°C WB)
EDB	:	Entering dry bulb temp.	(°C DB)
TC	:	Total cooling capacity	(kW)
SHC	:	Sensible heat capacity	(kW)
PI	:	Power input (Comp.+indoor+outdoor fan motor).	
CPI	:	Coefficient of power input	(-)

Caution TC and SHC are shown by kW.

5 Capacity tables

5 - 2 Cooling capacity tables

RZQ140BW1 (Pair)

Cooling

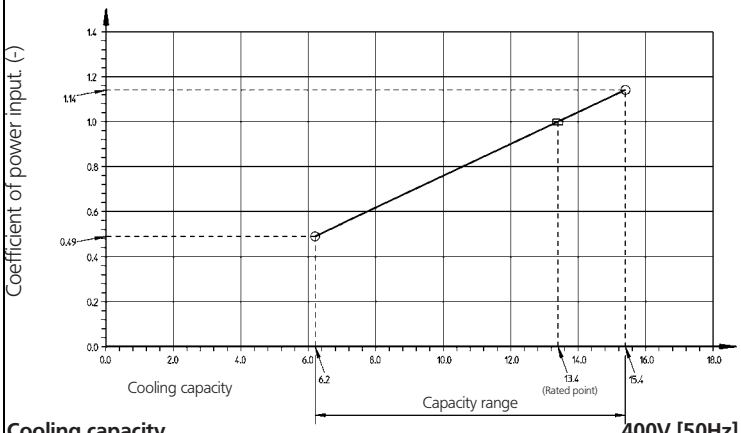

Cooling capacity **400V [50Hz]**

Indoor		Outdoor temp. (°CDB)											
EWB	EDB	25			30			35			40		
(°C)	(°C)	TC (kW)	SHC (kW)	CPI (-)	TC (kW)	SHC (kW)	CPI (-)	TC (kW)	SHC (kW)	CPI (-)	TC (kW)	SHC (kW)	CPI (-)
16.0	22	12.3	8.29	0.76	12.2	8.37	0.89	12.5	8.73	0.99	12.1	8.46	1.09
18.0	25	14.0	9.09	0.83	13.§	8.91	0.91	13.1	8.70	1.00	12.6	8.44	1.10
19.0	27	14.4	9.06	0.84	13.9	8.89	0.91	13.4	8.68	1.00	12.8	8.42	1.10
19.5	27	14.5	9.05	0.84	14.1	8.87	0.91	13.5	8.66	1.00	13.0	8.41	1.10
22.0	30	15.2	8.93	0.85	14.7	8.77	0.92	14.3	8.57	1.01	13.7	8.32	1.11
24.0	32	15.8	8.81	0.85	15.3	8.64	0.93	14.8	8.45	1.02	14.3	8.22	1.12

3TW28149

NOTES

1. This capacity table is only valid for pair combination with FBQ140
2. Ratings shown are net capacities which include a deduction for indoor fan motor heat
3. On the figure the mark ○ show the max. at standard conditions.
   On the figure the mark ▭ show rated capacity and rated coefficient of power input.
   However the max. capacity is not guaranteed, except at standard condition.
4. On the tables ▭ show rated capacity and rated coefficient of power input.
5. SHC is based on each EWB and EDB
   SHC* = SHC correction for other dry bulb
   SHC* = 0.02 x AFR (m^3/min.) x (1–BF) x (DB*–EDB)
   Add SHC* to SHC.
6. Capacities are based on following conditions:
   Outdoor air : 85 % RH. however, the condition on nominal capacity is 7°CDB/6°CWB (heating)
   Corresponding refrigerant piping length : 7.5 m
   Level difference : 0 m
7. Coefficient of power input is the percentage when the rated valve is defined as 1.00.
8. The value contains less than 5% error acording to indoor unit type.
9. Heating capacity include the drop of frost formation.
10. Air flow rate and BF are tabulated below.
    Pair

Model	FBQ140
AFR (BF)	35 (0.14)

11. Rated power input of each model is tabulated below.
    Pair

Outdoor	RZQ140C7
Indoor	RZQ140C7
Cooling	4.76kW
Heating	4.82kW

SYMBOLS

AFR:	Air flow rate	(m^3/mi
BF:	Bypass factor	
EWB:	Entering wet bulb temp.	(°CWB)
EDB:	Entering dry bulb temp.	(°CDB)
TC:	Total cooling/heating capacity	(kW)
SHC:	Sensible heating capacity	(kW)
PI:	Power input (comp.+indoor+outdoor fan motor)	(kW)
CPI:	Coefficient of power input.	(-)

Caution:
TC and SHC are shown by kW

5 Capacity tables

5 - 2 Cooling capacity tables

RZQ-B/C

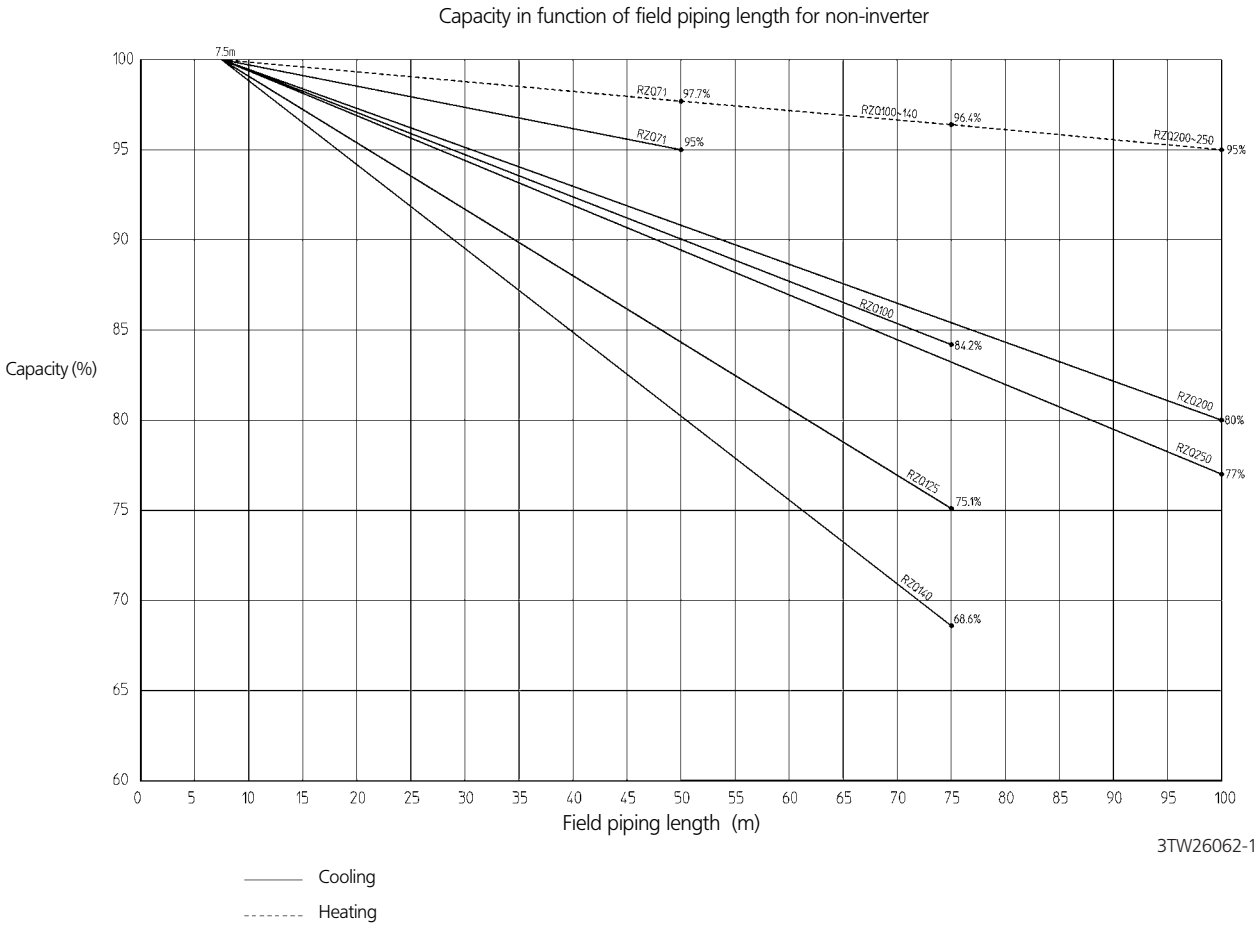

5 Capacity tables

5 - 3 Heating capacity tables

RZQ100B (Pair + Twin / triple)

Heating

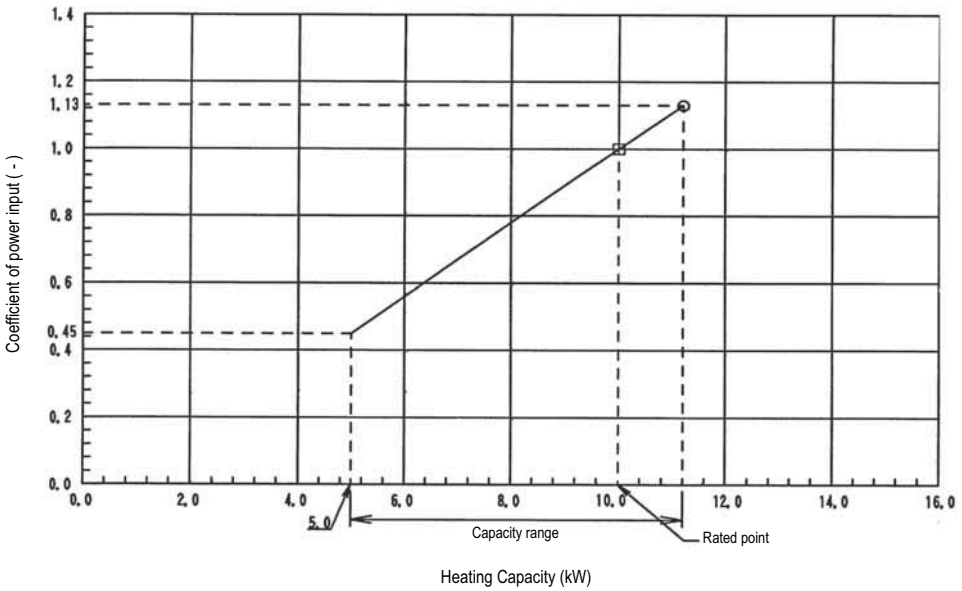

Heating

Indoor	Outdoor temperature (°C WB)											
EDB °C	-15		-10		-5		0		6		10	
	TC (kW)	CPI (-)	TC (kW)	CPI (-)	TC (kW)	CPI (-)	TC (kW)	CPI (-)	TC (kW)	CPI (-)	TC (kW)	CPI (-)
16.0	7.16	0.87	7.91	0.92	8.66	0.96	9.41	1.01	12.8	1.06	13.8	1.12
18.0	7.15	0.90	7.90	0.95	8.65	1.00	9.39	1.05	12.8	1.10	13.8	1.16
20.0	7.15	0.94	7.89	0.99	8.64	1.04	9.38	1.09	12.8	1.15	13.8	1.21
21.0	7.14	0.96	7.89	1.01	8.63	1.06	9.38	1.11	12.8	1.17	13.8	1.23
22.0	7.14	0.98	7.88	1.03	8.63	1.08	9.37	1.14	12.8	1.20	13.7	1.25
24.0	7.13	1.02	7.87	1.07	8.62	1.12	9.36	1.17	12.8	1.24	13.7	1.30

3TW28121-1A

NOTES

1 Ratings shown are net capacities which include a deduction for indoor fan motor heat.
2 On the figure the mark with ◯ show the max, onces at standard conditions.
On the figure the mark with □ show rated capacity and rated coefficient of power input.
However the max. Capacity is not guaranteed except at standard condition.
3 SHC is based on each EWB and EDB.
SHC for other dry bulb temperature = SHC + SHC*.
SHC* = SHC correction for other dry bulb.
= 0.02 x AFR (m^3/min.) x (1-BF) x (DB*-EDB)
Add SHC to SHC*.
4 Capacities are based on the following conditions.
Outdoor air: 85% RH.
However, the condition rated capacity is 7°C DB / 6°C WB. (heating)
Corresponding refrigerant piping length : 5.0m
Level difference : 0m
5 Coefficient of power input is the percentage when the rated value is defined as 1.00.
6 The value contains less than 5% error acording to indoor unit type.
7 Heating performance include the drop of frost formation.
8 Air flow rate and (BF) are given in table below:

(Pair)

	FCQH100D	FCQ100C	FCQ100D	FCQ100B	FBQ100B	FBQ100C	FHQ100	FAQ100	FUQ100
AFR (BF)	34 (0.17)	23.5 (0.16)	30 (0.11)	28 (0.16)	27 (0.20)	32 (0.14)	24 (0.14)	23 (0.10)	29 (0.07)

(Twin)

	FCQ50Cx2	FCQ50Bx2	FFQ50x2	FBQ50Bx2	FBQ50Cx2	FHQ50x2
AFR (BF)	12.5x2 (0.21x2)	15x2 (0.16x2)	12x2 (0.16x2)	14x2 (0.15x2)	16x2 (0.16x2)	13x2 (0.1x2)

(Triple)

	FCQ35Cx3	FCQ35Bx3	FFQ35x3	FBQ35Bx3	FBQ35Cx3	FHQ35x3
AFR (BF)	10.5x3 (0.28x3)	14x3 (0.16x3)	10x3 (0.25x3)	11.5x3 (0.15x3)	16x3 (0.15x3)	13x3 (0.2x3)

9 Rated power input of each model is tabulated below.

(Pair)

	FCQH100C	FCQ100C	FCQ100D	FCQ100B	FBQ100B	FBQ100C	FHQ100	FAQ100	FUQ100
Heating	2.53	3.14	2.56	3.14	3.00	2.79	3.60	3.39	3.28

(Twin)

	FCQ50Cx2	FCQ50Bx2	FFQ50x2	FBQ50Cx2	FBQ50x2	FHQ50x2
Heating	3.31	3.31	3.21	3.16	2.95	3.79

(Triple)

	FCQ35Cx3	FCQ35Bx3	FFQ35x3	FBQ35x3	FBQ35Cx3	FHQ35x3
Heating	3.31	3.31	3.21	3.16	2.95	3.79

SYMBOLS

AFR	:	Air flow rate	(m3/min.)
BF	:	Bypass factor	
EWB	:	Entering wet bulb temp.	(°C WB)
EDB	:	Entering dry bulb temp.	(°C DB)
TC	:	Total heating capacity	(kW)
SHC	:	Sensible heat capacity	(kW)
PI	:	Power input (Comp.+indoor+outdoor fan motor).	
CPI	:	Coefficient of power input	(-)

Caution TC and SHC are shown by kW.

5 Capacity tables

5 - 3 Heating capacity tables

RZQ125B (Pair + Twin / triple / double twin)

Heating

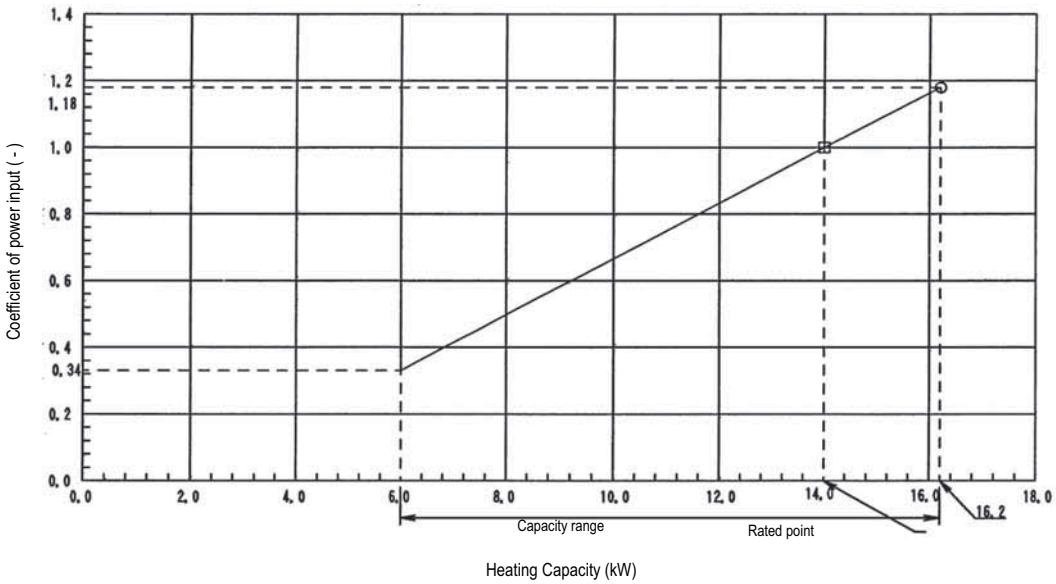

Heating

Indoor	Outdoor temperature (°C WB)											
EDB °C	-15		-10		-5		0		6		10	
	TC (kW)	CPI (-)	TC (kW)	CPI (-)	TC (kW)	CPI (-)	TC (kW)	CPI (-)	TC (kW)	CPI (-)	TC (kW)	CPI (-)
16.0	8.83	0.89	9.76	0.94	10.7	0.99	11.6	1.04	16.2	1.09	17.5	1.14
18.0	8.82	0.93	9.74	0.98	10.7	1.03	11.6	1.08	16.2	1.13	17.5	1.19
20.0	8.81	0.97	9.73	1.02	10.7	1.07	11.6	1.12	16.2	1.18	17.5	1.24
21.0	8.81	0.99	9.73	1.04	10.6	1.09	11.6	1.14	16.2	1.20	17.5	1.26
22.0	8.80	1.00	9.72	1.05	10.6	1.11	11.6	1.16	16.2	1.23	17.5	1.29
24.0	8.79	1.04	9.71	1.10	10.6	1.15	11.5	1.21	16.2	1.27	17.4	1.33

3TW28131-1A

NOTES

1 Ratings shown are net capacities which include a deduction for indoor fan motor heat.
2 On the figure the mark with ◯ show the max, onces at standard conditions.
On the figure the mark with □ show rated capacity and rated coefficient of power input.
However the max. Capacity is not guaranteed ecxept at standard condition.
3 SHC is based on each EWB and EDB.
SHC for other dry bulb temperature = SHC + SHC*.
SHC* = SHC correction for other dry bulb.
= 0.02 x AFR (m^3/min.) x (1-BF) x (DB*-EDB)
Add SHC to SHC*.
4 Capacities are based on the following conditions.
Outdoor air: 85% RH.
However, the condition rated capacity is 7°C DB / 6°C WB. (heating)
Corresponding refrigerant piping length : 5.0m
Level difference : 0m
5 Coefficient of power input is the percentage when the rated value is defined as 1.00.
6 The value contains less than 5% error acording to indoor unit type.
7 Heating performance include the drop of frost formation.
8 Air flow rate and (BF) are given in table below:

(Pair)

	FCQH125D	FCQ125C	FCQ125D	FCQ125B	FBQ125B	FBQ125C	FHQ125	FUQ125	FDQ125
AFR (BF)	34 (0.19)	27.5 (0.19)	30 (0.13)	31 (0.07)	35 (0.14)	39 (0.16)	30 (0.13)	32 (0.07)	45 (0.25)

(Twin)

	FCQ60Cx2	FCQ60Bx2	FFQ60x2	FBQ60Bx2	FBQ60Cx2	FHQ60x2
AFR (BF)	13.5x2 (0.21x2)	18x2 (0.1x2)	15x2 (0.11x2)	19x2 (0.11x2)	18x2 (0.15x2)	17x2 (0.2x2)

(Triple)

	FCQ50Cx3	FCQ50Bx3	FFQ50x3	FBQ50Bx3	FBQ50Cx3	FHQ50x3
AFR (BF)	10.5x3 (0.28x3)	14x3 (0.16x3)	10x3 (0.25x3)	11.5x3 (0.15x3)	16x3 (0.15x3)	13x3 (0.2x3)

9 Rated power input of each model is tabulated below.

(Pair)

	FCQH125C	FCQ125C	FCQ125D	FCQ125B	FBQ125B	FBQ125C	FHQ125	FUQ125	FDQ125
Heating	3.57	4.36	3.59	4.36	3.99	3.69	4.50	4.36	3.69

(Twin)

	FCQ60Cx2	FCQ60Bx2	FFQ60x2	FBQ60Cx2	FBQ60x2	FHQ60x2
Heating	4.59	4.59	4.26	4.20	3.90	4.74

(Triple)

	FCQ50Cx3	FCQ50Bx3	FFQ50x3	FBQ50x3	FBQ50Cx3	FHQ50x3
Heating	4.59	4.59	4.26	4.20	3.90	4.74

(Double twin)

	FCQ35Cx4	FCQ35Bx4	FFQ35x4	FBQ35Bx4	FBQ35Cx4	FHQ35x4
Heating	4.59	4.59	4.26	4.20	3.90	4.74

SYMBOLS

AFR	:	Air flow rate	(m3/min.)
BF	:	Bypass factor	
EWB	:	Entering wet bulb temp.	(°C WB)
EDB	:	Entering dry bulb temp.	(°C DB)
TC	:	Total heating capacity	(kW)
SHC	:	Sensible heat capacity	(kW)
PI	:	Power input (Comp.+indoor+outdoor fan motor).	
CPI	:	Coefficient of power input	(-)

Caution TC and SHC are shown by kW.

5 Capacity tables

5 - 3 Heating capacity tables

RZQ140B (Pair + Twin / triple / double twin)

Heating

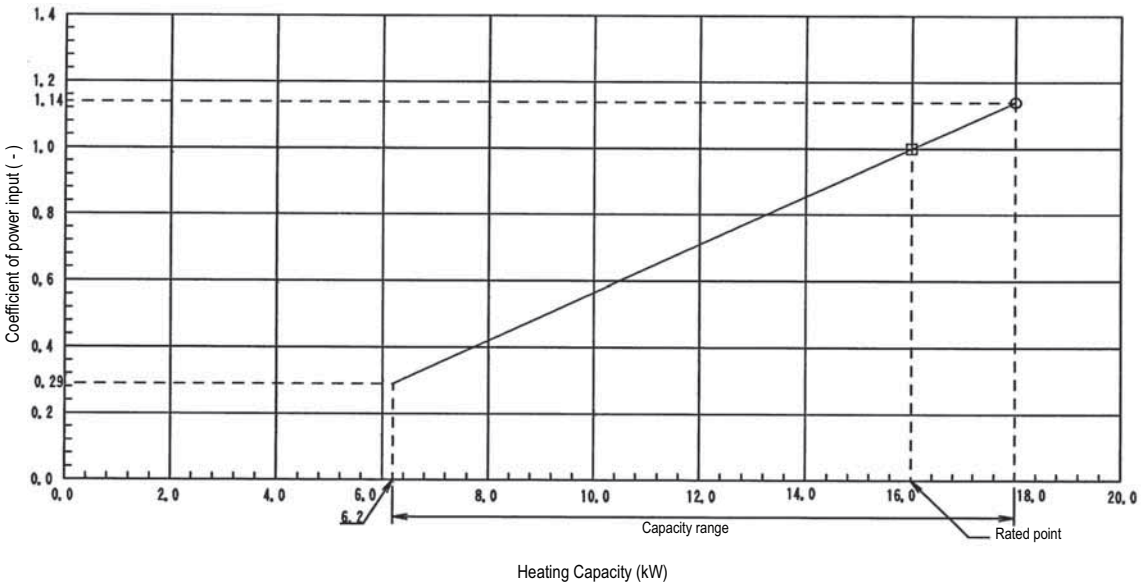

Heating

Indoor	Outdoor temperature (°C WB)											
EDB °C	-15		-10		-5		0		6		10	
	TC (kW)	CPI (-)	TC (kW)	CPI (-)	TC (kW)	CPI (-)	TC (kW)	CPI (-)	TC (kW)	CPI (-)	TC (kW)	CPI (-)
16.0	9.82	0.86	10.8	0.91	11.9	0.95	12.9	1.00	18.0	1.05	19.5	1.11
18.0	9.80	0.90	10.8	0.94	11.8	0.99	12.9	1.04	18.0	1.09	19.4	1.15
20.0	9.79	0.94	10.8	0.98	11.8	1.03	12.9	1.08	18..0	1.14	19.4	1.20
21.0	9.79	0.95	10.8	1.00	11.8	1.05	12.8	1.10	18.0	1.16	19.4	1.22
22.0	9.78	0.97	10.8	1.02	11.8	1.07	12.8	1.12	18.0	1.19	19.4	1.24
24.0	9.77	1.00	10.8	1.06	11.8	1.11	12.8	1.17	18.0	1.23	19.4	1.29

3TW28141-3A

NOTES

1 Ratings shown are net capacities which include a deduction for indoor fan motor heat.
2 On the figure the mark with ◯ show the max, onces at standard conditions.
On the figure the mark with ▭ show rated capacity and rated coefficient of power input.
However the max. Capacity is not guaranteed except at standard condition.
3 SHC is based on each EWB and EDB.
SHC for other dry bulb temperature = SHC + SHC*.
SHC* = SHC correction for other dry bulb.
= 0.02 x AFR (m^3/min.) x (1-BF) x (DB*-EDB)
Add SHC to SHC*.
4 Capacities are based on the following conditions.
Outdoor air: 85% RH.
However, the condition rated capacity is 7°C DB / 6°C WB. (heating)
Corresponding refrigerant piping length : 5.0m
Level difference : 0m
5 Coefficient of power input is the percentage when the rated value is defined as 1.00.
6 The value contains less than 5% error acording to indoor unit type.
7 Heating performance include the drop of frost formation.
8 Air flow rate and (BF) are given in table below:

(Pair)

	FCQH140D	FCQ140C	FCQ140D	FBQ140C
AFR (BF)	34 (0.20)	27.5 (0.19)	30 (0.13)	39 (0.16)

(Triple)

	FCQ50Cx3	FCQ50Bx3	FFQ50x3	FBQ50Bx3	FBQ50Cx3	FHQ50x3
AFR (BF)	12.5x3 (0.21x3)	15x3 (0.16x3)	12x3 (0.16x3)	14x3 (0.15x3)	16x3 (0.16x3)	13x3 (0.1x3)

(Twin)

	FCQ71Cx2	FCQ71Bx2	FFQ71x2	FBQ71Bx2	FBQ71Cx2	FHQ71x2	FAQ71x2	FCQH140Dx2
AFR (BF)	15.5x2 (0.19x2)	18x2 (0.1x2)	19x2 (0.11x2)	18x2 (0.08x2)	17x2 (0.1x2)	19x2 (0.07x2)	19x2 (0.08x2)	21x2 (0.17x2)

(Double Twin)

	FCQ35Cx4	FCQ35Bx4	FFQ35x4	FBQ35Bx4	FBQ35Cx4	FHQ35x4
AFR (BF)	10.5x4 (0.28x4)	14x4 (0.16x4)	10x4 (0.25x4)	11.5x4 (0.15x4)	16x4 (0.15x4)	13x4 (0.2x4)

9 Rated power input of each model is tabulated below.

(Pair)

	FCQH140D	FCQ140C	FCQ140D	FBQ-C
Heating	4.48	5.69	4.52	4.40

(Triple)

	FCQ50Cx3	FCQ50Bx3	FFQ50x3	FBQ50Bx3	FBQ50Cx3	FHQ50x3
Heating	5.52	5.52	5.11	5.06	4.64	5.69

(Twin)

	FCQ71Cx2	FCQ71Bx2	FBQ71Bx2	FBQ71Cx2	FHQ71x2	FUQ71x2	FAQ71x2	FCQH140Dx2
Heating	5.52	5.52	5.06	4.64	5.69	5.05	5.22	4.80

(Double twin)

	FCQ35Cx4	FCQ35Bx4	FFQ35x4	FBQ35Bx4	FBQ35Cx4	FHQ35x4
Heating	5.52	5.52	5.11	5.06	4.64	5.69

SYMBOLS

AFR	:	Air flow rate	(m3/min.)
BF	:	Bypass factor	
EWB	:	Entering wet bulb temp.	(°C WB)
EDB	:	Entering dry bulb temp.	(°C DB)
TC	:	Total heating capacity	(kW)
SHC	:	Sensible heat capacity	(kW)
PI	:	Power input (Comp.+indoor+outdoor fan motor).	
CPI	:	Coefficient of power input	(-)

Caution TC and SHC are shown by kW.

5 Capacity tables

5 - 3 Heating capacity tables

RZQ140BW1 (Pair)

Heating

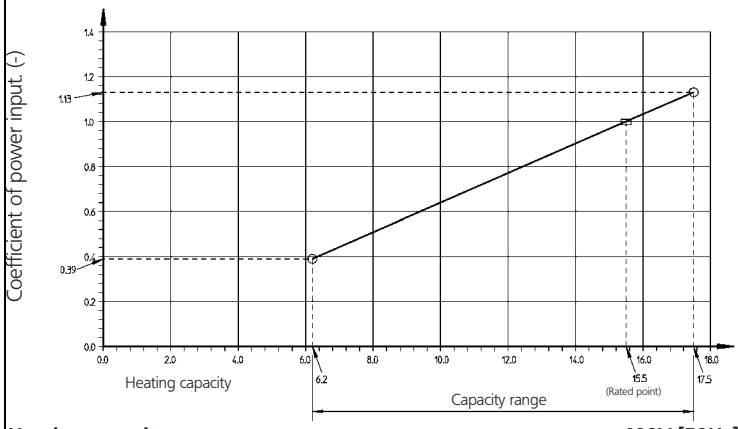

Heating capacity **400V [50Hz]**

Indoor	Outdoor temp. (°CWB)											
EDB	−15		−10		−5		0		6		10	
(°C)	TC (kW)	CPI (-)	TC (kW)	CPI (-)	TC (kW)	CPI (-)	TC (kW)	CPI (-)	TC (kW)	CPI (-)	TC (kW)	CPI (-)
16.0	9.51	1.05	10.5	1.11	11.5	1.16	12.5	1.22	15.5	0.92	16.8	0.97
18.0	9.49	1.10	10.5	1.15	11.4	1.21	12.5	1.27	15.5	0.96	16.7	1.01
20.0	9.48	1.14	10.5	1.20	11.4	1.26	12.5	1.32	15.5	1.00	16.7	1.05
21.0	9.48	1.16	10.5	1.22	11.4	1.28	12.4	1.34	15.5	1.02	16.7	1.07
22.0	9.47	1.18	10.5	1.24	11.4	1.31	12.4	1.37	15.5	1.04	16.7	1.09
24.0	9.46	1.22	10.5	1.29	11.4	1.35	12.4	1.42	15.5	1.08	16.7	1.13

3TW2814

NOTES

1. This capacity table is only valid for pair combination with FBQ140
2. Ratings shown are net capacities which include a deduction for indoor fan motor heat
3. On the figure the mark ◯ show the max. at standard conditions.
   On the figure the mark ▭ show rated capacity and rated coefficient of power input.
   However the max. capacity is not guaranteed, except at standard condition.
4. On the tables ▭ show rated capacity and rated coefficient of power input.
5. SHC is based on each EWB and EDB
   SHC* = SHC correction for other dry bulb
   SHC* = 0.02 x AFR (m^3/min.) x (1−BF) x (DB*−EDB)
   Add SHC* to SHC.
6. Capacities are based on following conditions:
   Outdoor air : 85 % RH. however, the condition on nominal capacity is 7° CDB/6° CWB (heating)
   Corresponding refrigerant piping length : 7.5 m
   Level difference : 0 m
7. Coefficient of power input is the percentage when the rated valve is defined as 1.00.
8. The value contains less than 5% error acording to indoor unit type.
9. Heating capacity include the drop of frost formation.
10. Air flow rate and BF are tabulated below.
    Pair

Model	FBQ140
AFR (BF)	35 (0.14)

11. Rated power input of each model is tabulated below.
    Pair

Outdoor	RZQ140C7
Indoor	RZQ140C7
Cooling	4.76kW
Heating	4.82kW

SYMBOLS

AFR:	Air flow rate	(m^3/mi
BF:	Bypass factor	
EWB:	Entering wet bulb temp.	(°CWB)
EDB:	Entering dry bulb temp.	(°CDB)
TC:	Total cooling/heating capacity	(kW)
SHC:	Sensible heating capacity	(kW)
PI:	Power input (comp.+indoor+outdoor fan motor)	(kW)
CPI:	Coefficient of power input.	(-)

Caution:
TC and SHC are shown by kW

6 Dimensional drawing & centre of gravity

6 - 1 Dimensional drawing

RZQ100-125-140BW1

unit (mm)

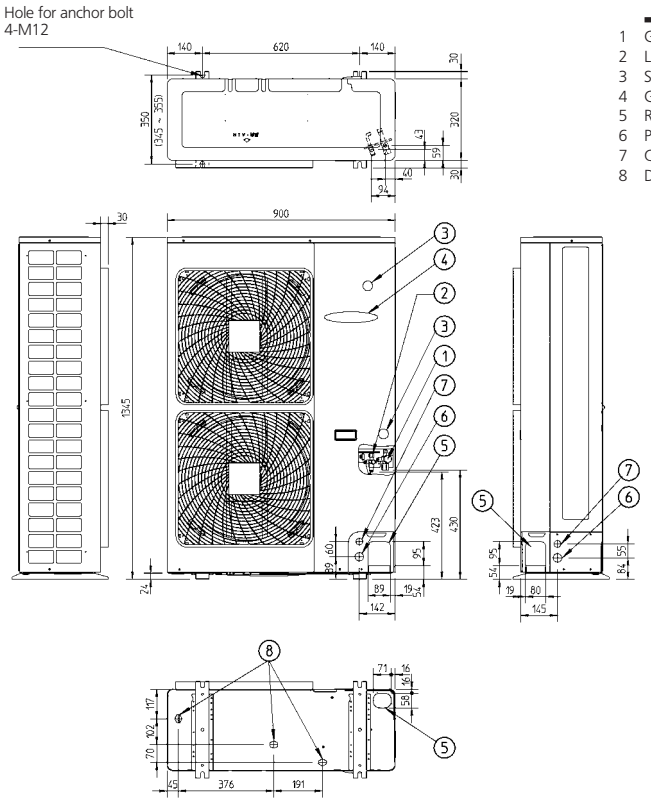

1 Gas pipe connection ⌀15.9 flare
2 Liquid pipe connection - ⌀9.5 flare
3 Service port (in the unit) (2x)
4 Grounding terminal M5 (in switch box)
5 Refrigerant piping intake
6 Power supply wiring intake (knock hole ⌀34)
7 Control wiring intake (knock hole ⌀27)
8 Drain outlet

3TW26071-1

6 Dimensional drawing & centre of gravity

6 - 2 Centre of gravity

RZQ-BW1

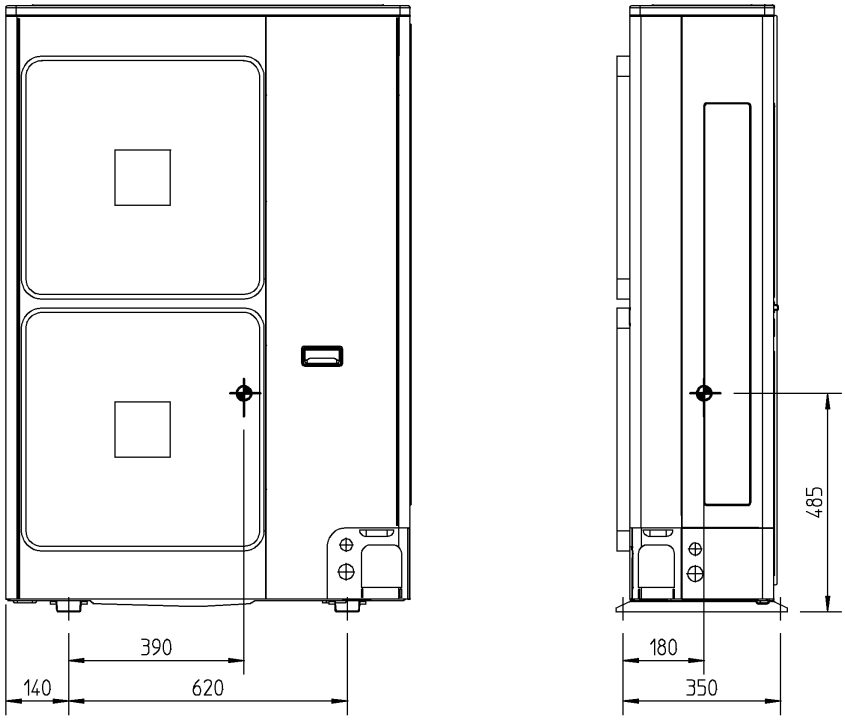

4TW26079-3

7 Piping diagram

RZQ100-125-140BW1(Pair)

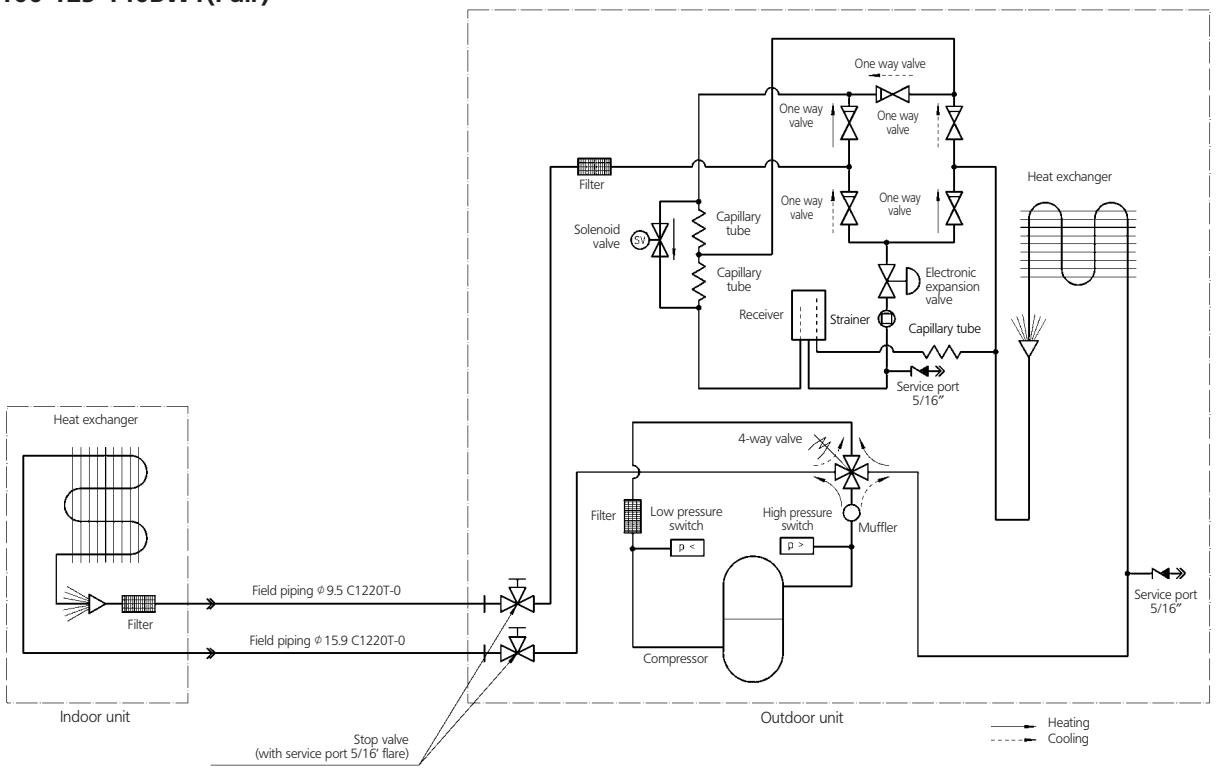

3TW26745-1

RZQ100-125-140BW1(Twin)

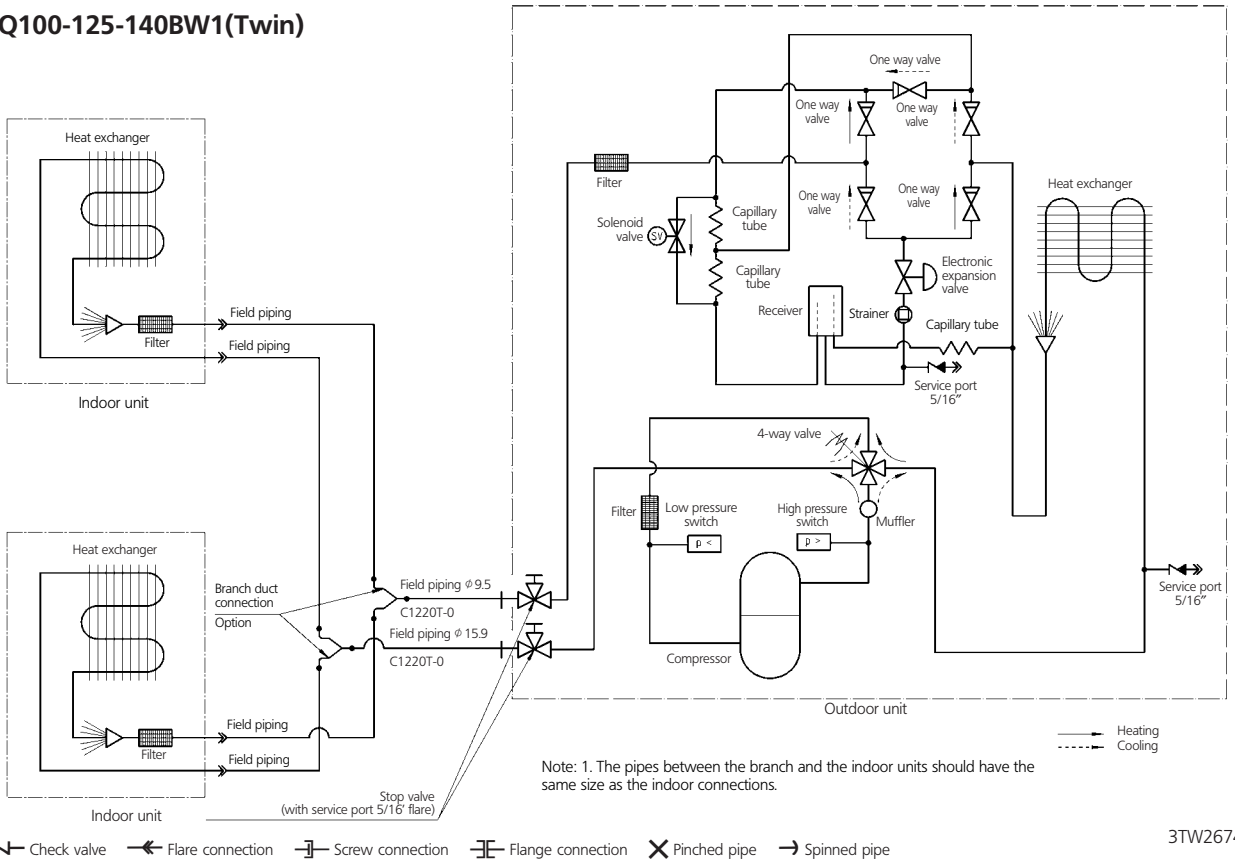

Note: 1. The pipes between the branch and the indoor units should have the same size as the indoor connections.

3TW26745-2

7 Piping diagram

RZQ100-125-140BW1(Triple)

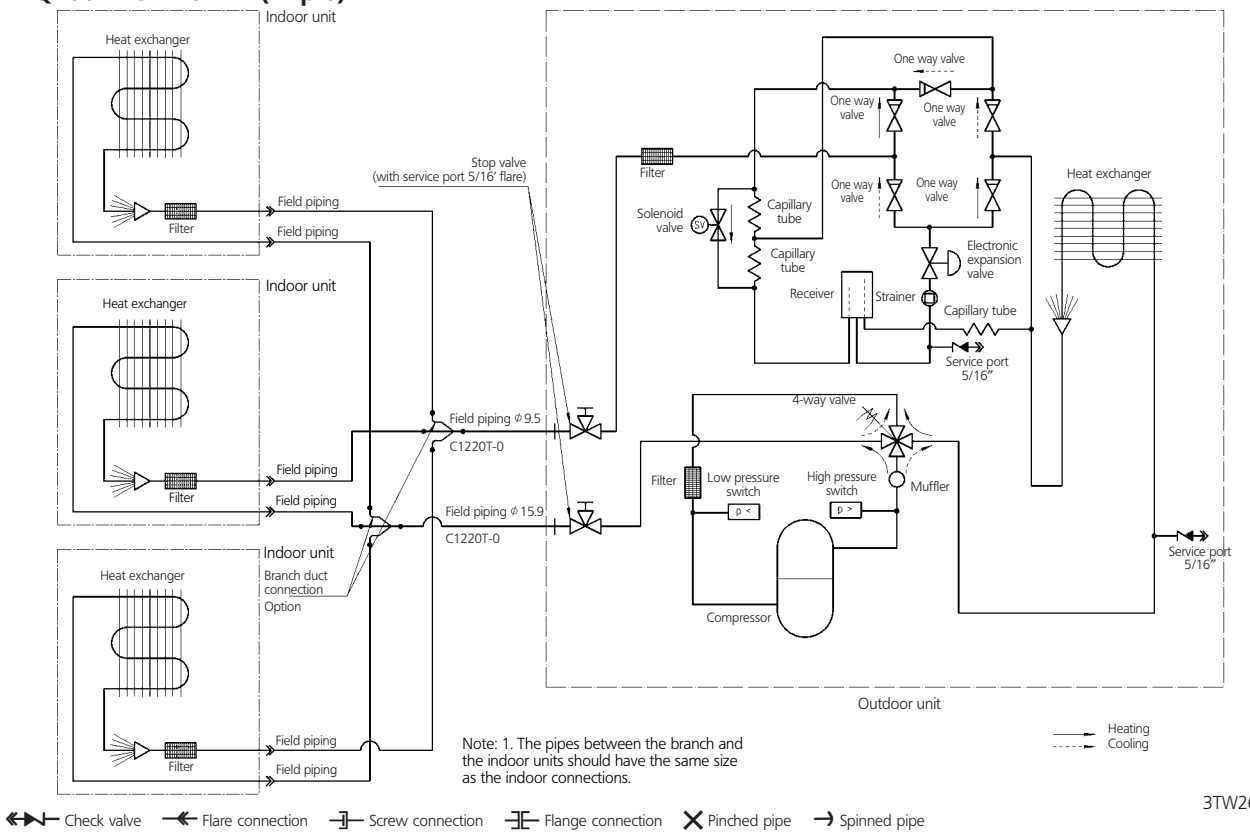

Note: 1. The pipes between the branch and the indoor units should have the same size as the indoor connections.

3TW26745-3

Check valve — Flare connection — Screw connection — Flange connection — Pinched pipe — Spinned pipe

RZQ100-125-140BW1(Double twin)

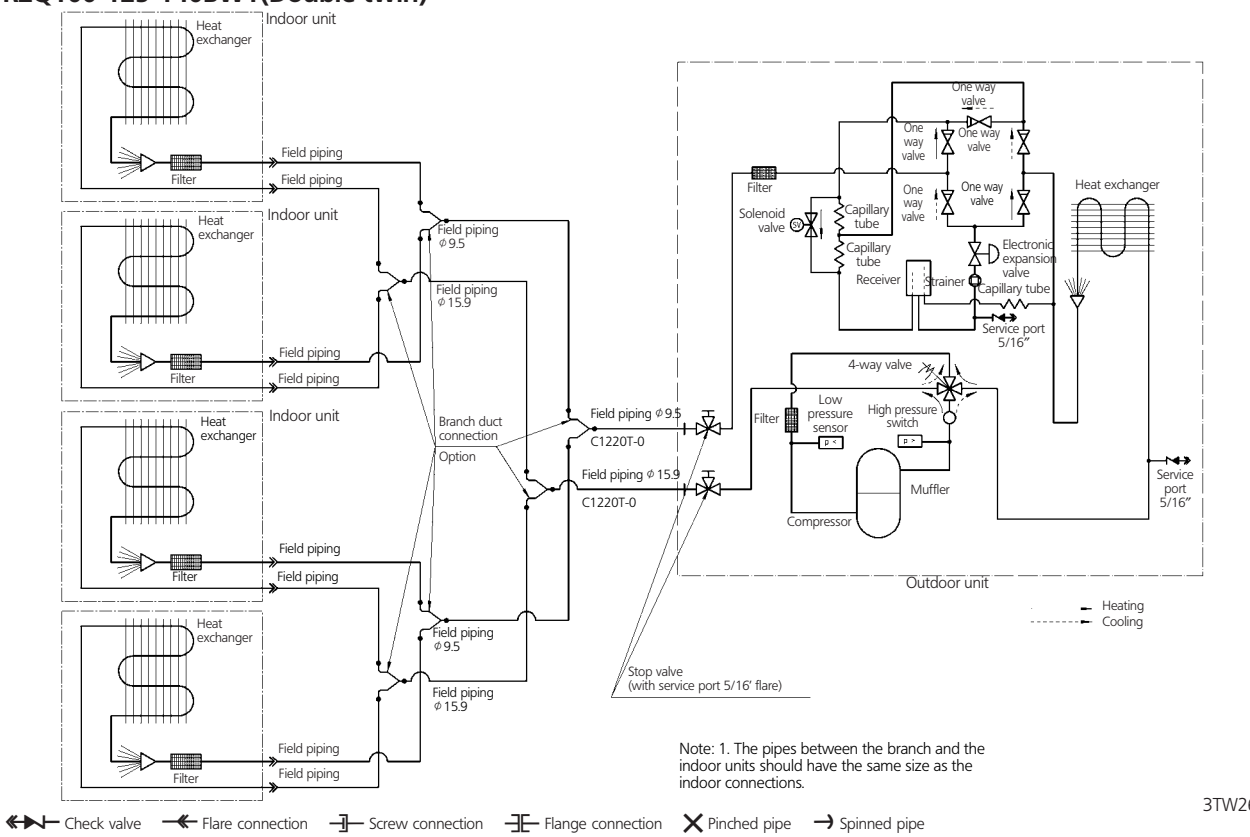

Note: 1. The pipes between the branch and the indoor units should have the same size as the indoor connections.

3TW26755-4

Check valve — Flare connection — Screw connection — Flange connection — Pinched pipe — Spinned pipe

8 Wiring diagram

8 - 1 Wiring diagram

RZQ100-125-140BW1

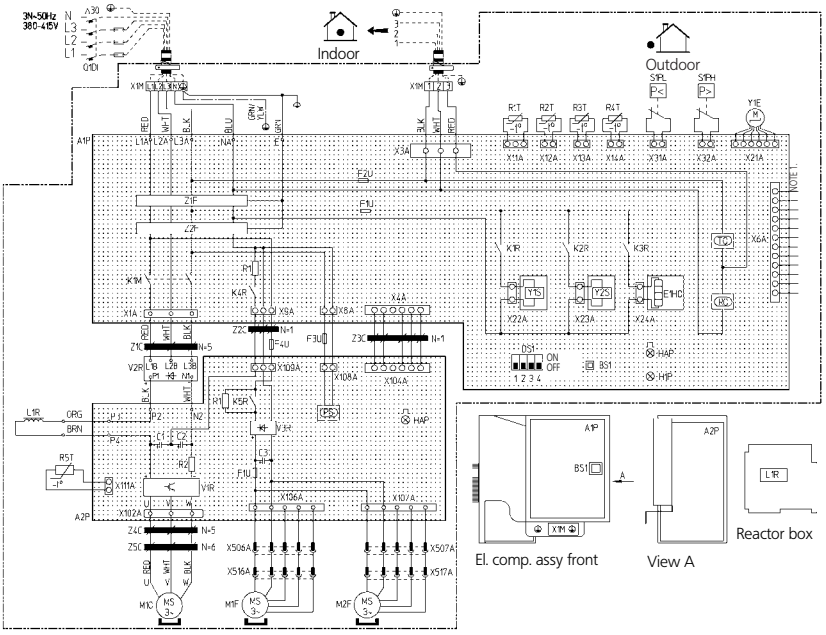

L : Live
N : Neutral
: Field wiring
: Protective earth (screw)
: Wire clamp
: Terminal
: Connector
: Relay connector

Colours
BLK: Black / ORG: Orange / BLU: Blue /
WHT: White / RED: Red / YLW:Yellow /
BRN: Brown / GRN: Green

NOTES:

1. Refer to the optional manual, for connection wiring to X6A.
2. Confirm the method of setting the selector switches (DS1) by service manual. When the unit is shipped by factory all switches are set to be off.

A1P	Printed circuit board
A2P	Printed circuit board (INV)
BS1	Push button switch (forced defrost / pump down)
C1-C2-C3	Capacitor
DS1	Dip switch
F1U (A2P)	Fuse (T 6,3A/250V)
F2U	Fuse (T 6,3A/250V)
F3U	Fuse (B 10A/250V)
F4U	Fuse (B 10A/250V)
HAP (A1P)	Light emitting diode (service monitor green)
HAP (A2P)	Light emitting diode (service monitor green)
H1P (A1P)	Light emitting diode (service monitor red)

K1M(A2P)	Magnetic contactor
K1R(A1P)	Magnetic relay (Y1S)
K2R(A1P)	Magnetic relay (Y2S)
K3R(A1P)	Magnetic relay (E1HC)
K4R, K5R	Magnetic relay
L1R	Reactor
M1C	Motor compressor
M1F	Motor fan
PS	Power circuit
Q1DI	Earth leakage breaker (30mA)
R1-R2	Resistor

R1T	Thermistor (air)
R2T	Thermistor (coil)
R3T	Thermistor (discharge pipe)
R4T	Thermistor (suction pipe)
R5T	Thermistor (power module)
S1PH	Pressure switch (high)
S1NPL	Pressure sensor (low)
RC	Signal receiver circuit
TC	Signal transmission circuit
V1R	Power module

V2R-V3R	Diode module
V1T	IGBT
X6A	Connector (Option)
X1M	Terminal strip
Y1E	Expansion valve
Y1S	4-way valve
Y2S	Solenoid valve
Z1C, Z2C	Noise filter
Z3C, Z4C	
Z1F	Noise filter
Z1F	Noise filter (with surge absorber)

2TW26766-1

9 Sound data

9 - 1 Sound pressure spectrum

RZQ100BW1 - Cooling

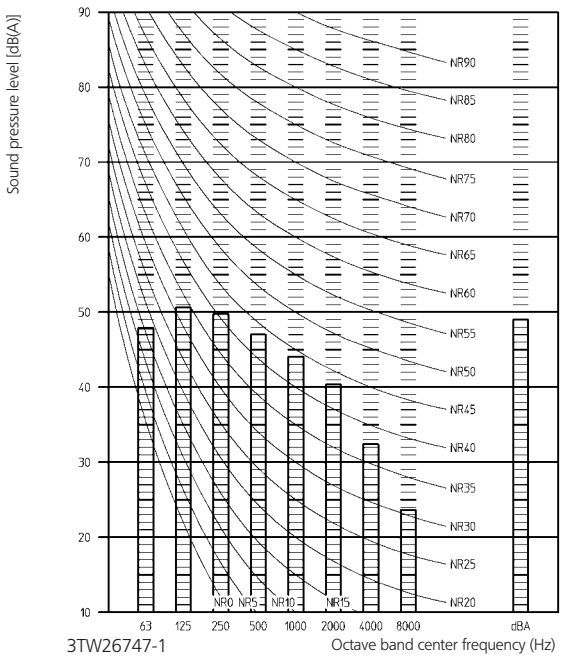

3TW26747-1

NOTES

1 Data is valid at free field condition
2 Data is valid at nominal conditions.
3 dB(A) = A-weighted sound pressure level (A-scale according to IEC)
4 Reference acoustic pressure 0dB = 20μPa



Measuring location (discharge side)

RZQ100BW1 - Heating

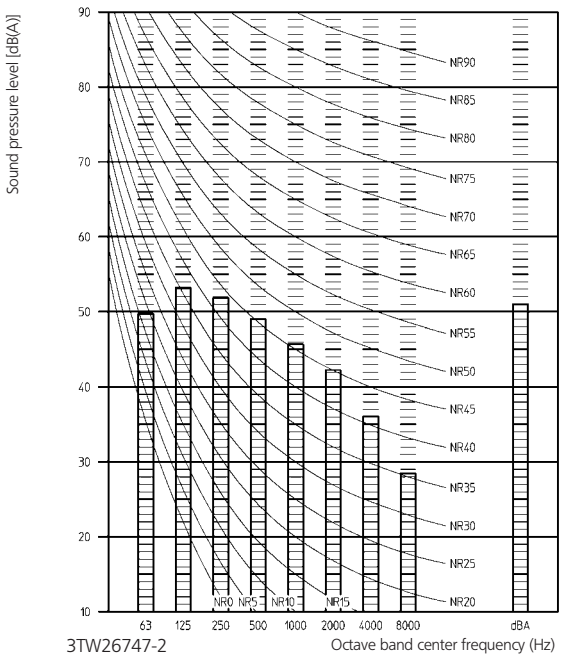

3TW26747-2

NOTES

1 Data is valid at free field condition
2 Data is valid at nominal conditions.
3 dB(A) = A-weighted sound pressure level (A-scale according to IEC)
4 Reference acoustic pressure 0dB = 20μPa



Measuring location (discharge side)

RZQ125BW1 - Cooling

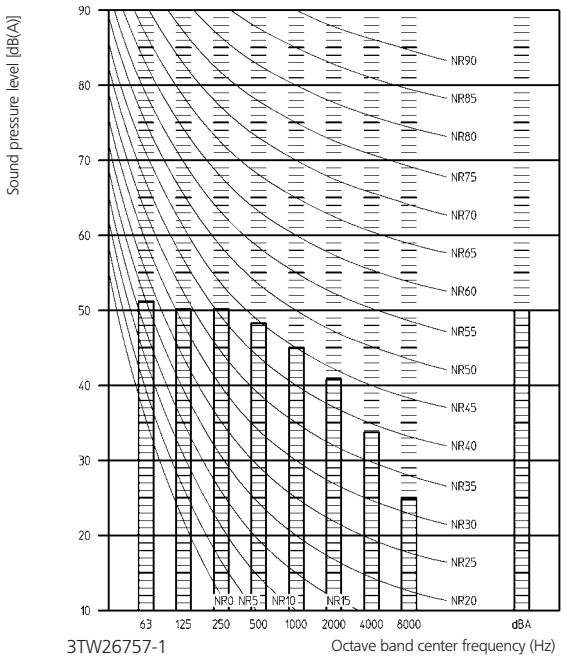

3TW26757-1

NOTES

1 Data is valid at free field condition
2 Data is valid at nominal conditions.
3 dB(A) = A-weighted sound pressure level (A-scale according to IEC)
4 Reference acoustic pressure 0dB = 20μPa



Measuring location (discharge side)

RZQ125BW1 - Heating

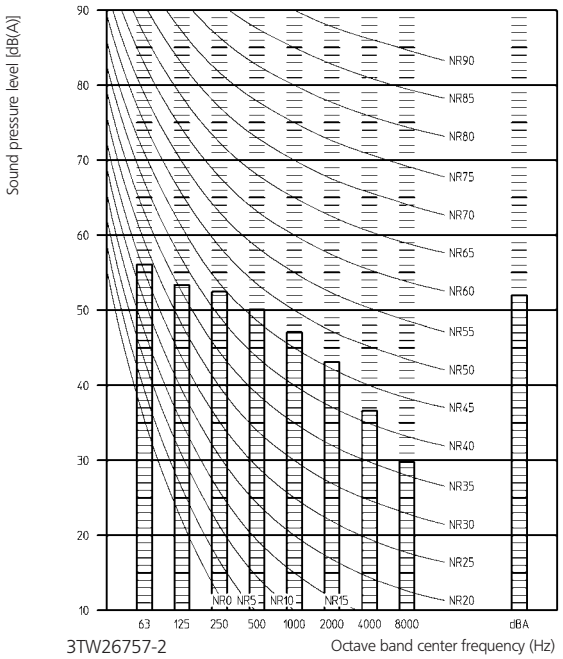

3TW26757-2

NOTES

1 Data is valid at free field condition
2 Data is valid at nominal conditions.
3 dB(A) = A-weighted sound pressure level (A-scale according to IEC)
4 Reference acoustic pressure 0dB = 20μPa



Measuring location (discharge side)

9 Sound data

9 - 1 Sound pressure spectrum

RZQ140BW1 - Cooling

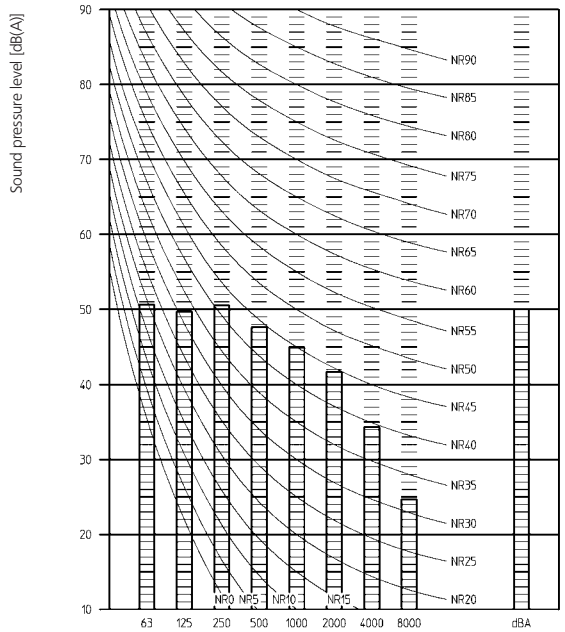

3TW26787-1

NOTES

1 Data is valid at free field condition
2 Data is valid at nominal conditions.
3 dB(A) = A-weighted sound pressure level (A-scale according to IEC)
4 Reference acoustic pressure 0dB = 20μPa



Measuring location (discharge side)

RZQ140BW1 - Heating

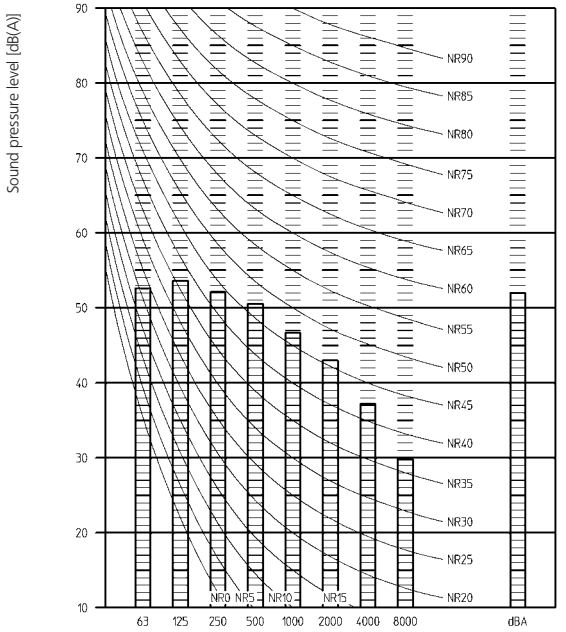

3TW26787-2

NOTES

1 Data is valid at free field condition
2 Data is valid at nominal conditions.
3 dB(A) = A-weighted sound pressure level (A-scale according to IEC)
4 Reference acoustic pressure 0dB = 20μPa



Measuring location (discharge side)

9 Sound data

9 - 2 Sound power spectrum

RZQ100BW1 - Cooling

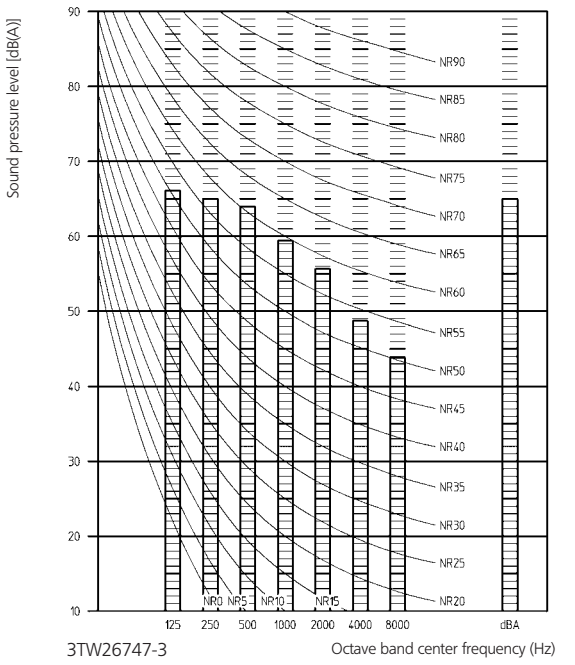

NOTES

1 Data is valid at free field condition
2 Data is valid at nominal conditions.
3 dB(A) = A-weighted sound pressure level (A-scale according to IEC)
4 Reference acoustic pressure 0dB = 20μPa

RZQ125BW1 - Cooling

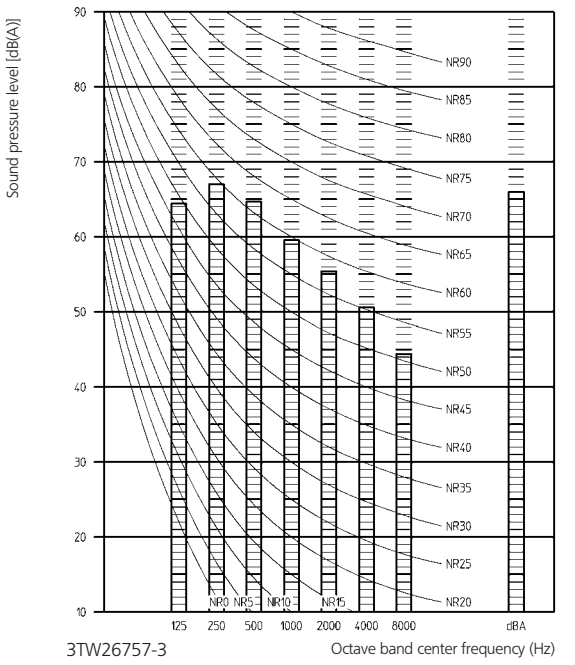

NOTES

1 Data is valid at free field condition
2 Data is valid at nominal conditions.
3 dB(A) = A-weighted sound pressure level (A-scale according to IEC)
4 Reference acoustic pressure 0dB = 20μPa

RZQ140BW1 - Cooling

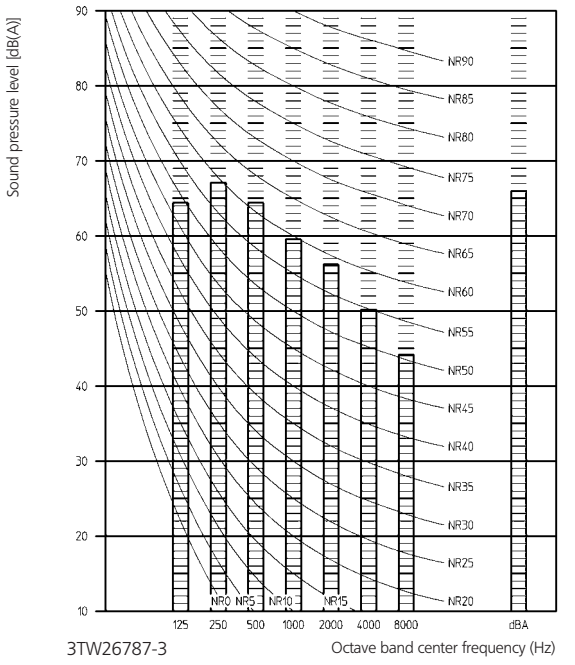

NOTES

1 Data is valid at free field condition
2 Data is valid at nominal conditions.
3 dB(A) = A-weighted sound pressure level (A-scale according to IEC)
4 Reference acoustic pressure 0dB = 20μPa

10 Installation

10 - 1 Installation method

RZQ100-125-140BW1

A. Non stacked installation

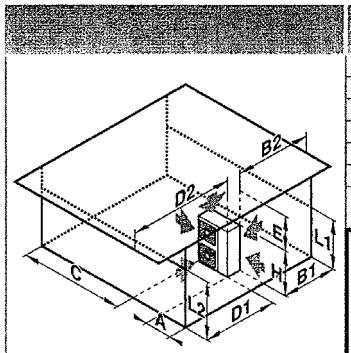

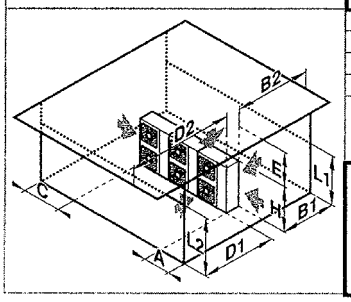

							A	B1	B2	C	D1	D2	E	L1/L2	
✓								≥50(100)							
✓		✓	✓				≥100	≥100		≥100					
✓				✓				≥100				≤500	≥1000		
✓		✓	✓	✓			≥150	≥150		≥150		≤500	≥1000		
	✓										≥500				
	✓			✓					≤500		≥500		≥1000		
✓	✓				L1<L2			≥50(100)			≥500				
					L2<L1			≥50(100)			≥500				
✓	✓			✓	L1<L2	L1≤H		≥150(250)	≤500		≥750		≥1000	0<L1≤1/2H	1
											≥1000			0<L1≤1/2H	
						H<L1		L1≤H							
					L2<L1	L2≤H		≥50(100)			≥500	≥500	≥1000	0<L2≤1/2H	
								≥100(200)			(1000)			1/2H<L2≤H	
						H<L2		L2≤H							
✓		✓	✓				≥200	≥200(300)		≥1000					
✓		✓	✓	✓			≥200	≥200(300)		≥1000		≤500	≥1000		
	✓										≥1000				
	✓			✓					≤500		≥1000		≥1000		
✓	✓				L1<L2			≥200(300)			≥1000				
					L2<L1			≥150(250)			≥1000			0<L2≤1/2H	
								≥200(300)			(1500)			1/2H<L2≤H	
✓	✓			✓	L1<L2	L1≤H		≥200(300)	≤500		≥1000		≥1000	0<L1≤1/2H	1
											≥1250			1/2H<L1≤H	
						H<L1		L1≤H							
					L2<L1	L2≤H		≥150(250)			≥1000	≤500	≥1000	0<L2≤1/2H	2
								≥200(300)			(1500)			1/2H<L2≤H	
						H<L2		L2≤H							

Legend

- Suction side obstacle
- Discharge side obstacle
- Left side obstacle
- Right side obstacle
- Top side obstacle
- ✓ Obstacle is present

In these cases, close the bottom of the installation frame to prevent discharged air from being bypassed.

In these cases, only 2 units can be installed.

This situation is not allowed.

Figures between ( ) indicate the dimensions only for the 100-125-140 class models.

B. Stacked installation

1. Obstacles exist in front of the outlet side

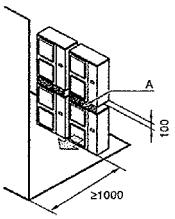

2. Obstacles exist in front of the air inlet

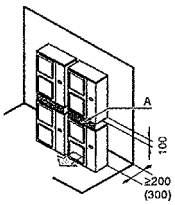

Do not stack more than one unit.
About 100mm is required as the dimension for laying the upper outdoor unit's drain pipe.
Get the portion A sealed so that air from the outlet does not bypass.

C. Multiple-row installation

1. Installation of one unit per row

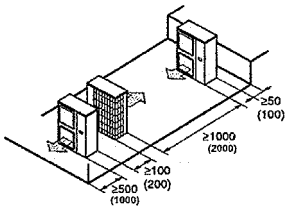

2. Installing multiple units (2 units or more) in lateral connection per row

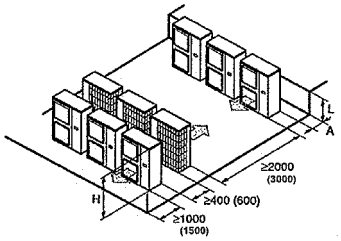

Relation of dimensions of H, A, and L are shown in the table below.

	L	A
L ≤ H	0 < L ≤ 1/2 H	150 (250)
	1/2 H < L	200 (300)
H < L	Installation impossible	

3TW26739-4

11 Operation range

RZQ-B

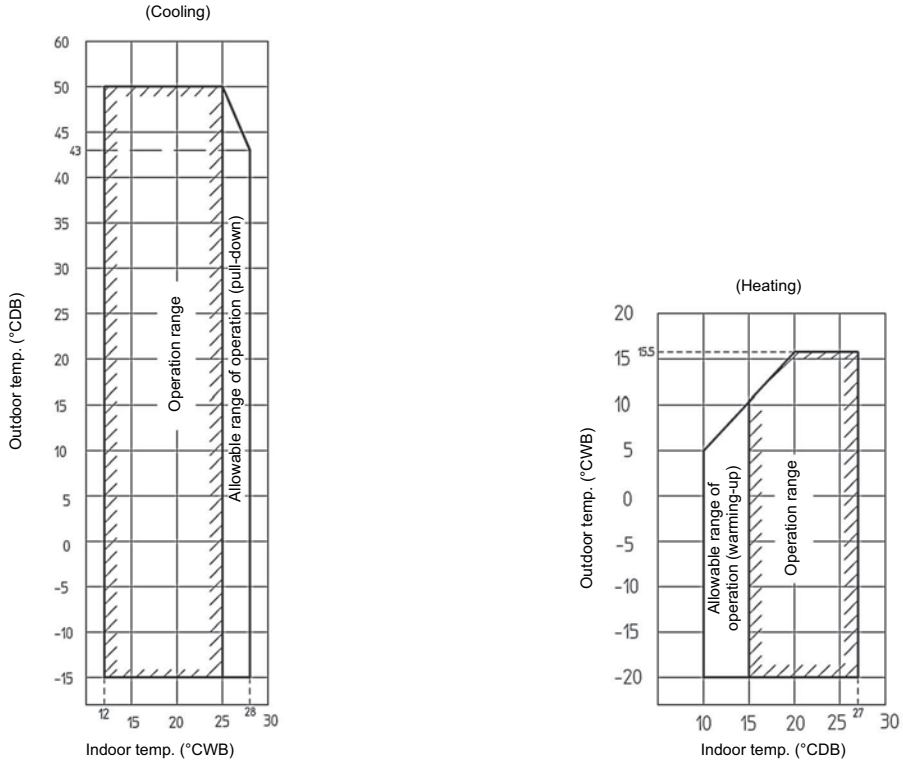

NOTE

1 Depending on operation and istallation conditions. The indoor unit can change over to freeze-up operation (indoor de-icing)
2 To reduce the freeze-up operation (indoor de-icing) frequency it is recommended to install the outdoor unit in a location not exposed to wind.

3TW26733-1B