

OMNICARE

LOOP WIRED

EMERGENCY VOICE COMMUNICATION

Manufacturing EVC systems since 2001

VIGIL OmniCare

The OmniCare system was the first of its kind when introduced in 2007 as a combined EVC system. Since then it has been installed worldwide and has become the system of choice for many. The system now includes a three-part toilet alarm kit which, like all of the remote units, is powered from the line.

SYSTEM FEATURES:

- Full system monitoring.
- Battery backed for use in the event of mains power failure (24 hours in standby plus three hours use, as standard. These times can be increased if required).
- One master and multiple slave panels can be linked on one system.
- Control panel options from 4-way through to 127-way.
- Remote units are connected to the control panel in a loop configuration.
- Fully compliant to BS5839-9:2011.
- Assists companies with compliance to BS9999:2008.
- Addressable system via the remote units.
- Link to the fire detection system prevents hoax disabled refuge calls (toilet alarms, fire and steward telephones remain active). Can be completely or partly overridden.
- Speech steered (disabled refuge remotes) and full duplex speech (fire telephones and steward telephones).
- Any combination of the following outstations can be installed on a single system:
  - Disabled refuge remotes (Type B outstations).
  - Firefighter telephones (Type A outstations).
  - Emergency (steward) telephones (Type A outstations).
  - Combined disabled refuge and fire telephone.
  - Disabled toilet alarms.



BENEFITS OF OMNICARE:

- Loop wiring.
- One loop for multiple styles of remote unit.
- Combined outstation available featuring a disabled refuge and fire telephone in one housing.
- Full networking and multi-panel facilities.
- All outstations powered from the line, including toilet alarms.
- Advance disabled refuge remote option.
- Robust, reliable and well established system.

If the OmniCare EVC system is not what you are looking for, our CARE2 radial wired system may suit your requirements.

VIGIL OmniCare

... 4-127 way panel sizes ... BS5839-9:2011 compliant ... multiple panels can be installed on one system ...

CONTROL PANEL:

- One master and multiple slave panels can be linked on one system (panels are configured on installation).
- Output for unanswered call indicator; with adjustable delay.
- Volt free contact - operated when in fault, set during installation.
- Lockable glazed door.
- Indicators for: in use/occupied, call, fault, power, charger and speech volume.
- Handset volume control.
- 'Listening' facility.
- Fire panel interface.



BATTERY BACKUP:

- OmniCare is fully monitored and battery backed.
- The batteries provide 24 hours standby plus three hours use in the event of a mains failure. (These times can be increased if required.)
- Systems of 48-way and above are supplied with a separate enclosure to house the batteries.

	PANELS	GREY	STAINLESS STEEL
4-32 way	4-way	BVOC4M	BVOC4MS
	8-way	BVOC8M	BVOC8MS
	16-way	BVOC16M	BVOC16MS
	32-way	BVOC32M	BVOC32MS
	Flush mount bezel	BVCRFB2	BVCRFB2S
	Rack mount kit	BVCRM3 (7U)	
48-64 way	48-way	BVOC48	BVOC48S
	64-way	BVOC64	BVOC64S
	Flush mount bezel	BVCRFB1	BVCRFB1SS
	Rack mount kit	BVCRM1 (11U)	
80-127 way	80-way	BVOC80	BVOC80S
	96-way	BVOC96	BVOC96S
	112-way	BVOC112	BVOC112S
	127-way	BVOC128	BVOC128S
	Flush mount bezel	BVCRFB3	BVCRFB3S
	Rack mount kit	BVCRM2 (20U)	

Remote lamp/buzzer	BVOCCA

TOUCHSCREEN CONTROL:



- Touchscreen control option - ideal for reception and lobby areas.
- Each system is bespoke, with 'button' or 'graphic layout' display options.
- Can be installed remotely from the master panel.
- Suitable for single panel or networked systems (a different control panel is required for networked systems).
- Simple to navigate touchscreen control, provides the operator with complete control of the OmniCare system.
- 'Administrator' and 'guest' password protected accounts.
- History and fault log with real time date stamp. Enables administrators to view activity and response times on the system.

REMOTE LAMP BUZZER:



- Provides a visible and audible signal of a call on the OmniCare system.
- Ideal solution for systems where the control panel is mounted in an unmanned area.
- Uses the output on the master panel with adjustable delay.
- Stainless steel finish.

DISABLED REFUGE REMOTE UNIT:



- Provides two-way communication between building management and person(s) occupying a 'Refuge Area' during an emergency evacuation - typically a fire.
- User simply presses the button to initiate call (occupy area). Further communication is hands free at the refuge point or by the user at the control panel.
- Type B outstation.
- Calls are reset either at the control panel or via the remote, when the refuge area occupant has been evacuated to safety.
- Volt free contact, active when occupied, to silence loudspeakers, operate over-door lamps, etc.

ADVANCE DISABLED REFUGE REMOTE:



- The Advance remote has some additional benefits:
  - Integral induction loop.
  - The text is tactile, luminescent and in Braille.
  - A large button with which is surrounded by high intensity LEDs.
- Calls are reset either at the control panel or via the remote.
- Volt free contact, active when occupied, to silence loudspeakers, operate over-door lamps, etc.

IP66 RATED ENCLOSURE:



- Green, surface mount enclosure.
- Enables mounting of refuge remote in external areas, such as car parks, balconies, etc Complete with termination card and fixings.
- Takes one BVOCECPG remote unit.

PLASTERBOARD BACK BOX:



- Enables 'first fix' in plasterboard for the disabled refuge remote.
- Complete with termination card and fixings.
- Green or stainless steel options (bezel colour).

DISABLED REFUGE	GREEN	STAINLESS STEEL*
Refuge remote	BVOCECPG	BVOCECPS
Flush mount bezel	BVCRMGRN	BVCRMSS

ADVANCE DISABLED REFUGE	GREEN
Advance remote surface mount	BVOCAS
Advance remote flush mount	BVOCAF

ENCLOSURES	GREEN	STAINLESS STEEL
IP66 enclosure	BVCRIPBG	-
Plasterboard back box	BVCRFBG	BVCRFBS

Disabled refuge override	BVCRBG

* Features a stainless steel front panel with an aluminium powder coat back box.

DISABLED REFUGE OVERRIDE SWITCH:

- Disabled refuge outstations on an OmniCare system are typically in 'standby' mode until activated by the fire alarm panel. (If preferred, they can be set to be permanently 'live'.)
- A system in standby mode will need to be activated occasionally, such as for routine testing. An override switch (BVCRBG) can be used for this purpose.

Refuge Area:

Temporary waiting area of relative safety.

Should be protected from a fire for a period of time sufficient to enable the evacuation sequence to be completed.

Commonly located within fire protected stairwells.

Can be a protected lobby, protected corridor or protected room. Can also be a flat roof, balcony or similar space sufficiently protected or remote, with its own means of escape.

Should be accessible for a person in a wheelchair.

As a minimum, should be 900 mm x 1400 mm.

... any combination of outstation on a single panel ... loop wired providing cost savings with cabling ...

FIRE TELEPHONE:



- Telephone handset in a metal enclosure. Used by fire officers/building control during an emergency, such as a fire.
- Assists with the efficient evacuation of a building.
- Robust red handset with hearing aid compatible earpiece (T-coil).
- Type A outstation.
- Robust handset in heavy duty enclosure.
- Provides clear, full duplex, two-way communication with the control panel.
- Conference facility via control panel.
- Speaker for local broadcast from the control panel.
- Calls are initiated by simply opening the door.

STEWARD TELEPHONE:



- Designed for sports venues and stadia, the steward telephone has the same facilities as the fire telephone.
- The distance between outstations in sports venues should be no greater than 60m (BS5839-9:2011 "no-one should have to travel more that 30m to reach an outstation").

COMBINED REMOTE UNIT:



- Provides the facility of both a disabled refuge and fire telephone at one call point.
- The combined unit has the same features as the standard disabled refuge and the fire telephone remotes.
- Designed to enable correct mounting heights for each component (as set out in BS5839-9).
- Shows as one point of presence on the control panel.
- Unique to the OmniCare system.

FIRE TELEPHONE	RED	STAINLESS STEEL
Fire telephone - push door	BVOCF	BVOCFS
Fire telephone - push door + beacon	BVOCFB	-
Fire telephone - slot lock door	BVOCFL	BVOCFSL
Fire telephone - slot lock door + beacon	BVOCFLB	-
Flush mount bezel	BVFHBEZ	BVFHBEZSS

STEWARD TELEPHONE	GREEN
Steward telephone - push door	BVOCET
Steward telephone - push door + beacon	BVOCETB
Steward telephone - slot lock door	BVOCETL
Steward telephone - slot lock door + beacon	BVOCETLB
Flush mount bezel	BVOCETBZ

COMBINED UNIT	RED	STAINLESS STEEL
Combined unit - push door	BVOCC	BVOCCSP
Combined unit - push door + beacon	BVOCCB	-
Combined unit - slot lock door	BVOCCL	BVOCCSL
Combined unit - slot lock door + beacon	BVOCCLB	-
Flush mount bezel	BVOCFBR	BVOCFBS
Combined unit - RED & GREEN	BVOCCGCP	

Type A & Type B remotes:

TYPE A - an outstation using a telephone handset. Intended for evacuation or firefighting.

TYPE B - an outstation using an intercom. Intended for use by disabled people in refuge areas.

"An outstation intended for use by disabled people at refuges may be either type A or B. However, type B outstations should be used in situations where the outstation will be operated by members of the public."

BS5839-9:2011

VIGIL OmniCare

... all outstations powered from the line ... no local power required ... up to two toilet alarms per repeater ...

DISABLED TOILET ALARM:



- The 3-part toilet alarm is fitted to the OmniCare system via a repeater (BVOCRIF) unit.
- Powered from the line (does not require local power).
- Fully compliant to BS8300:2009.
- Up to two toilet alarm kits can be connected to one repeater (will show as one point on the panel).
- Each DTAKIT comprises:
  - Ceiling mounted pull switch (with two 'G' pulls).
  - Reset button with LED and (optional) sounder.
  - Over-door triangular lens with integral sounder.
- Caller reassurance facility (the sounder pulses faster when the call is accepted at the panel).



REPEATER UNIT:

- This unit has two key functions.
  - Connects the 3-part toilet alarm DTAKIT to the OmniCare system.
  - Used to allow cable lengths in excess of 200m between remote units.



REPEATER UNIT	WHITE	STAINLESS STEEL
Repeater unit (zintec)	BVOCRIF	

TOILET ALARM	WHITE	STAINLESS STEEL
Toilet alarm kit (3-parts)	DTAKIT	DTASKIT
Ceiling pull	DTACP	DTASCP
Over-door light	DTAODL	DTASODL
Reset point	DTARP	DTASRP
Repeater unit (zintec)	BVOCRIF	

BS8300:2009 requires that all new disabled toilets are fitted with an emergency toilet alarm.

CONNECTION DETAILS:

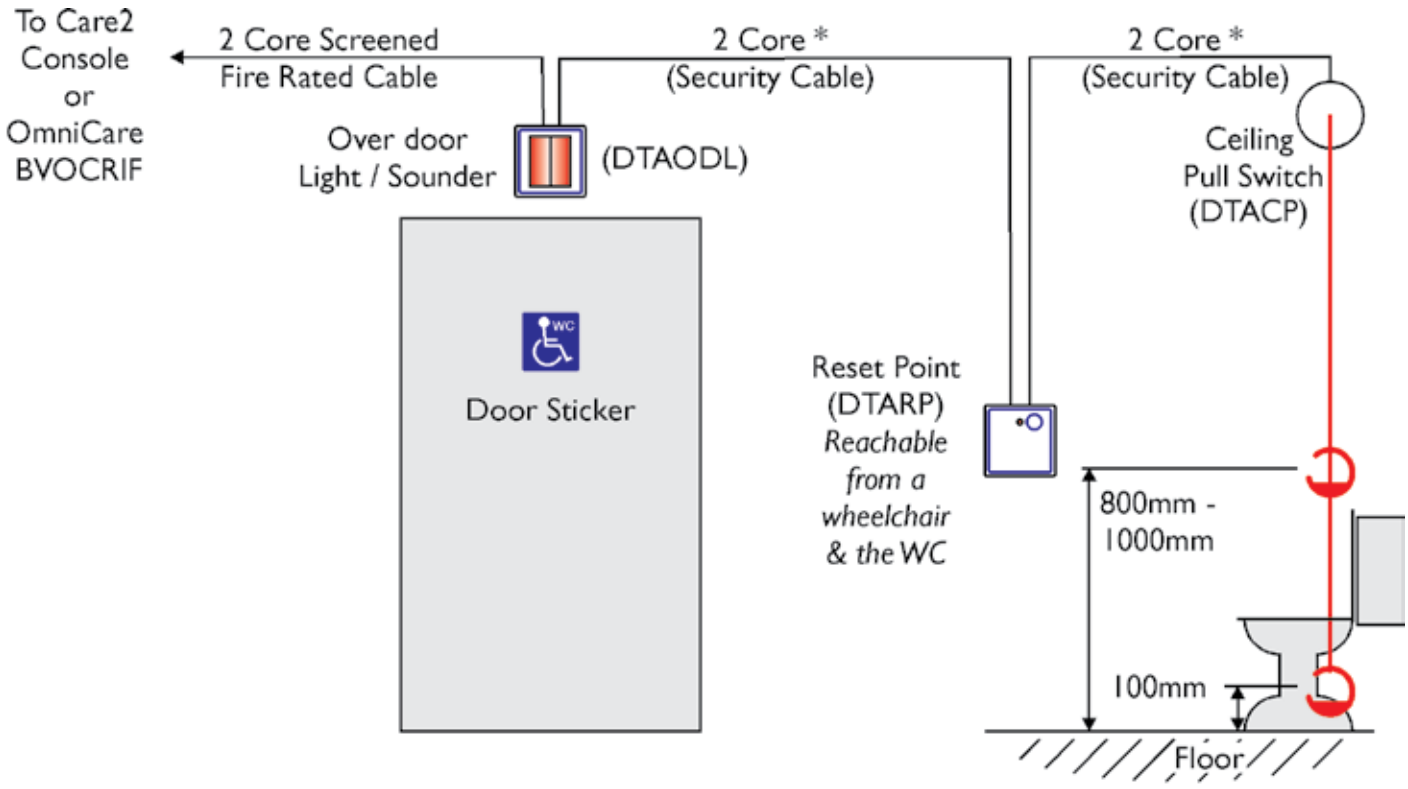

* The Safety Earth connection MUST be fitted if Stainless Steel front panels or metal back boxes are used.

Please note: This 3-part DTAKIT cannot be connected to OmniCare systems where a BVFREPEM (old style) repeater and the 4-part toilet alarm system has been fitted.

DTAKIT components are different to those supplied in the 4-part BVOCDTA and are, therefore, not compatible.

SYSTEM INFORMATION & CABLING:

GENERAL INFORMATION:

- There are two main components - the master control panel(s) and the remote units.
- Remote units are wired in a ring circuit configuration and are 'self-learning', with an auto-commissioning feature.
- The ring circuit technology enables continued operation in the event of a cable break.
- Any combination of remote units can be linked to the control panel on a single wiring loop.
- The master control panel is typically wall mounted in a central control room.
- Remote units are wall mounted in locations such as refuge areas, stairwells, fallback positions, corridors and other 'gathering' points, at a height easily reached by users.
- More than one master panel can be placed on the ring circuit, thus allowing control of local areas.

SYSTEM REQUIREMENTS:

- Fire rated enhanced four core, colour coded, cable with a screen must be used for fire fighting systems.
- Standard fire resisting cables could be considered suitable for:
  - EVC systems for use in disabled refuges but not for fire fighting in (a) sprinklered buildings; (b) unsprinklered buildings less than 30m in height, provided that evacuation takes place in three or fewer phases.
  - Underground sections of cabling at sports and similar venues.
- A repeater unit (BVOCRIF) must be used if the distance between remotes exceeds 200m.
- Disabled refuge, advance disabled refuge, fire telephone, emergency/steward telephone, combined DRS/fire telephone and toilet alarm units can be placed on the same loop.
- Typically 20-30 remotes per loop.
- Repeater units (BVOCRIF) are used to connect the toilet alarms (DTAKIT) to the system. Up to two (3-part) DTAKITs can be connected to a BVOCRIF. (Alternatively one DTAKIT with an additional pull cord can be installed. Useful for rooms with two points of call, e.g. a toilet cubicle or shower area.)
- No local power required for any outstation, including disabled toilet alarms.
- The capacitance of MICC cable varies between manufacturers, if the specification is for MICC cable and if the runs are greater than 100 metres, you may wish to contact our technical team to ensure it is within tolerance:
  - MICC lightweight 4-core with screen: 100m
  - MICC heavyweight 4-core with screen: 200m
  - Enhanced colour coded 4-core with screen: 200m (recommended by Baldwin Boxall).

MOUNTING POSITIONS :

BS5839-9:2011 recommends:

Control panel:

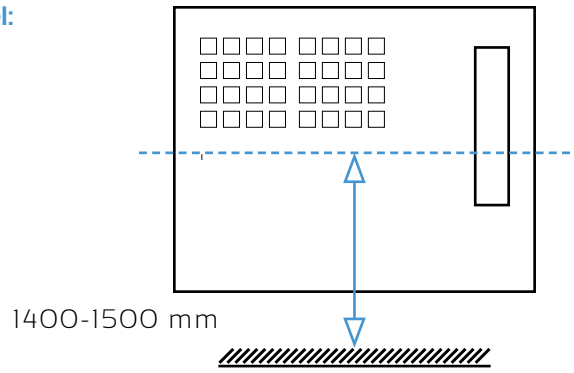

Disabled refuge outstations:

Type B

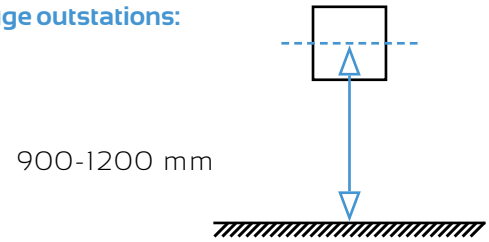

Fire & emergency telephones:

Type A

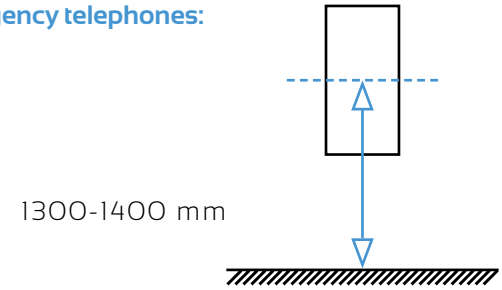

Combined outstation:

Type A & B

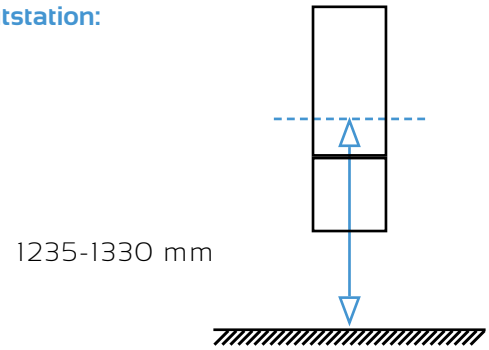

Disabled toilet alarm pull:

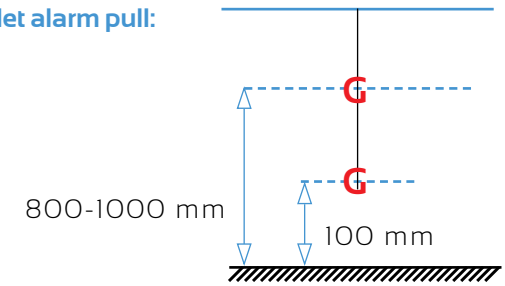

SYSTEM CABLING & NETWORKING:

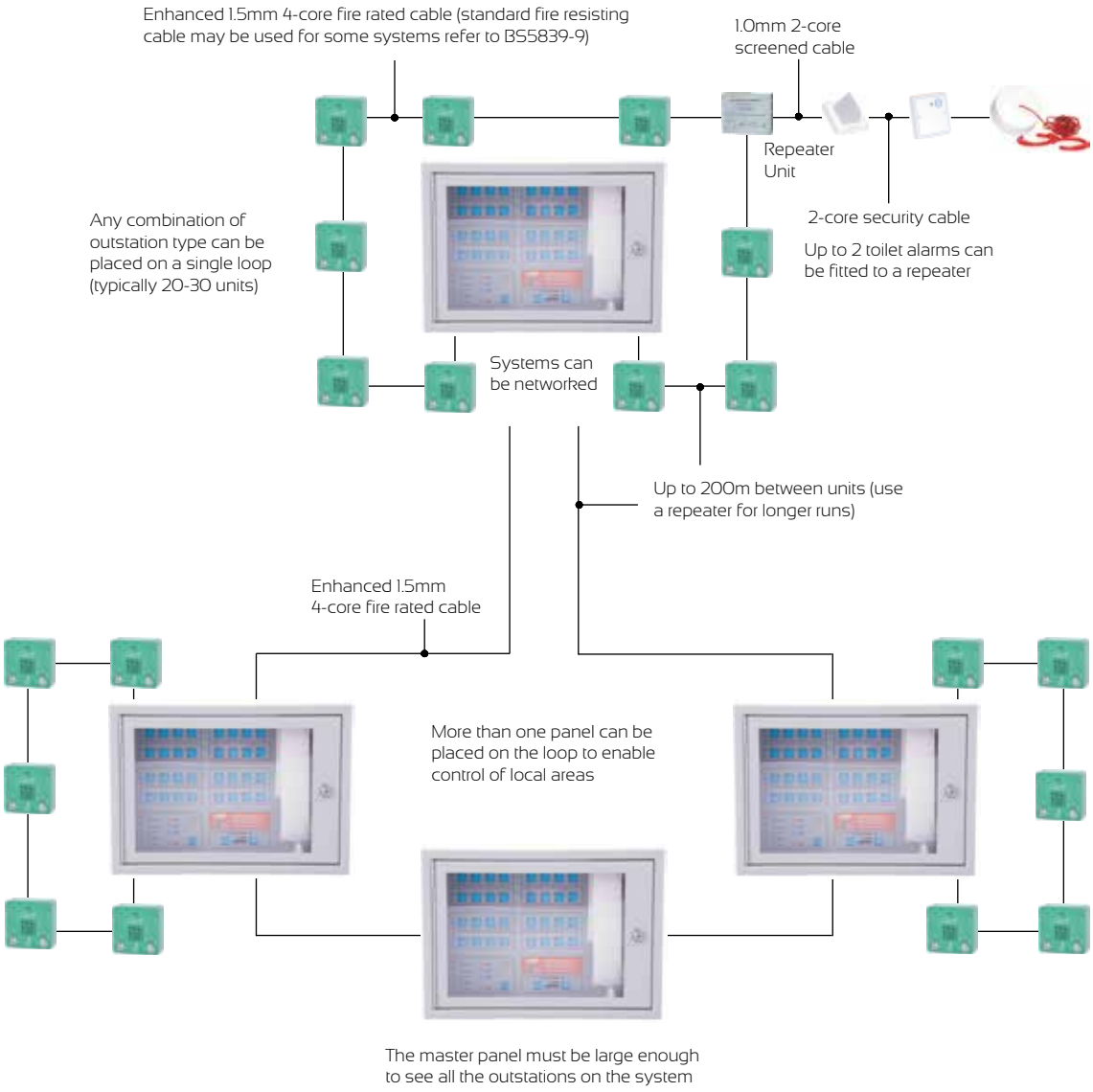

"Emergency voice communication (EVC) systems allow firefighters and others to communicate with one another during emergency situations in and around buildings and at sports and similar venues, such as entertainment centres. They also allow communication with disabled persons.

"Emergency voice communication systems, are used in connection with life safety and need, therefore, to be subject to high standards of design, manufacture, installation, commissioning and maintenance, similar to those covering fire detection and fire alarm systems and voice alarm systems."

BS5839-9:2011

OMNICARE SYSTEM SPECIFICATION:

	Control Panel	Disabled Refuge	Fire Telephone	Emergency / Steward Telephone	Combined DRS & Fire Telephone
Product codes: BVOC.....	Mini: 4M, 8M, 16M, 32M Std: 48, 64 Lg: 80, 96, 128	Std: ECPG, ECPS Adv: AS, AF	F, FB, FL, FLB, FS, FSL	ET, ETB, ETL, ETLB	C, CB, CL, CLB, CSP, CSL
Power supply	230V AC	12-40V DC powered from ring circuit			
Power consumption (VA)	10VA + 1VA per remote fitted	30mA @35V typical			35mA @ 35V typical
Humidity range	95% non-condensing				
Temperature range	-10°C to +30°C	-10°C to +40°C			
Indicators	In use, call, fault, power, charger & speech volume	System healthy, status + (Advance) system active	System healthy		System healthy, call status
Dimensions mm WxHxD	Mini: 410 x 290 x 200 Standard: 410 x 455 x 200 Large: 410 x 777 x 200	Std: 134 x 134 x 56 Adv: (flush) 178 x 440 x 3, (surface) 180 x 440 x 64	130 x 350 x 100		130 x 480 x 100
Bezel dimensions mm WxH	Mini: 461 x 340 (25) Standard: 461 x 506 (25) Large: 461 x 827 (25)	Std: 154 x 154 (10) Adv: n/a	170 x 390 (20)		170 x 520
Bezel cut out mm	Mini: 420 x 300 Standard: 420 x 465 Large: 420 x 787	Std: 136 x 136 Adv flush mount cutout: 133 x 235 x 65	138 x 358		138 x 488
Knockouts/cable entry points	20 mm top & rear	20 mm & 25 mm			20 mm & 25 mm*
Finish	Grey or stainless steel	Std: green or stainless steel Adv: green with Braille & tactile luminescent text	Red or stainless steel	Green	All red, all stainless steel or red telephone with green DRS section

* 2 x 20 mm top (site wiring), and 2 x 20 mm bottom (relay contacts from disabled refuge section).

DISABLED TOILET ALARM:

	Three Part Kit	Overdoor Light / Sounder	Reset Point	Ceiling Pull
Product codes: DTA...	KIT, SKIT	ODL, SODL	RP, SRP	CP, SCP
Alarm type		90 dB @ 30 cm		
Dimensions mm WxHxD		White: 85 x 85 x 58 Stainless steel: 85 x 85 x 60	White: 85 x 85 x 13 Stainless steel: 85 x 85 x 14	White: 30 x 80 (diameter) Stainless steel: 85 x 85 x 14
Cable requirements		2-core security cable		
Back box requirements (not supplied)		25 mm deep single gang flush back box or 'round cornered' plastic surface box		White: supplied in a surface mount enclosure Stainless steel: 25 mm deep single gang flush back box or 'round cornered' surface box

BALDWIN BOXALL

TEL: +44 (0) 1892 664422
FAX: +44 (0) 1892 663146

EMAIL: MAIL@BALDWINBOXALL.CO.UK
WEB: WWW.BALDWINBOXALL.CO.UK

BALDWIN BOXALL COMMUNICATIONS LTD
WEALDEN INDUSTRIAL ESTATE,
FARNINGHAM ROAD, CROWBOROUGH,
EAST SUSSEX, TN6 2JR, UNITED KINGDOM.

WE RESERVE THE RIGHT TO CHANGE THE PRODUCT SPECIFICATION WITHOUT PRIOR NOTICE OR LIABILITY. DOC NO: 1.0049.06.13