PURPOSE OF ISSUE	PLANNING

Do not scale from this drawing. All information should be checked by the contractor on site before commencing work. Any discreprencies should be reported to the architect immediately. All rights are reserved and are not transferable. Unauthorised reproductions of this drawing are not permitted.

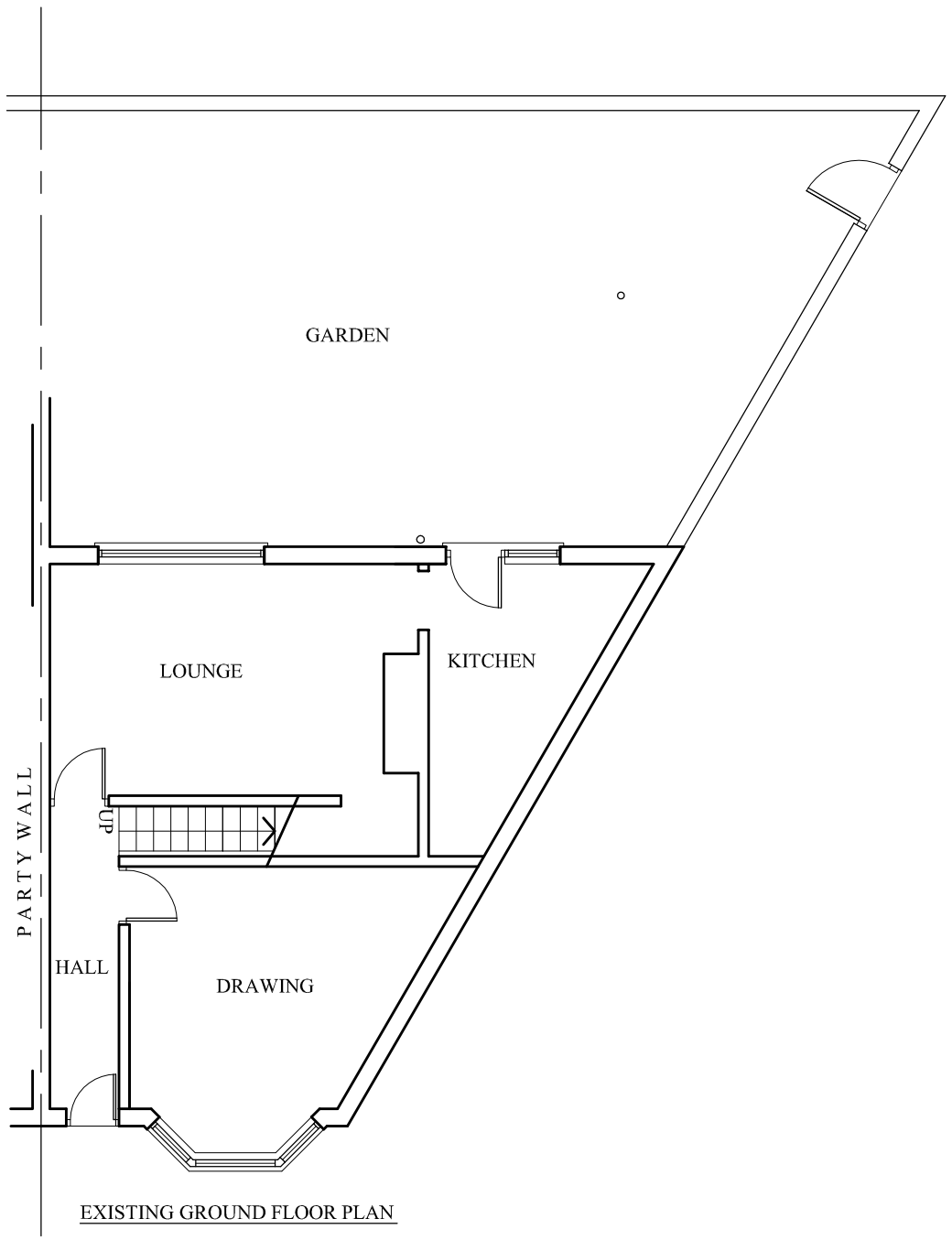

EXISTING GROUND FLOOR PLAN



EXISTING REAR ELEVATION

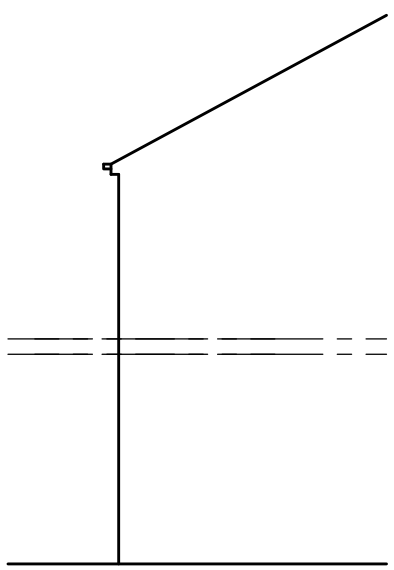

EXISTING SIDE ELEVATION

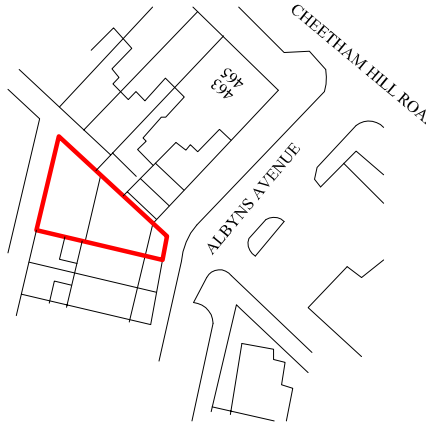

LOCATION PLAN 1:1000

NORTH

PROJECT
2 Albyns Avenue, M8 9AQ

CLIENT
Mr. A. A. Choudhry

DRAWING TITLE
Existing Plan

JOB No	DRAWING No
-	NA-B01

SCALE	DATE	REVISION
1:100@A3	May. 2014	
DRAWN	CHECKED BY	-
NA		

t: 0782 895 3405
e: niamat@hotmail.co.uk

na design