Copyright hub architecture Ltd

Do not scale - use given dimensions only
Work to larger scale information only
To be read in accordance with all other project documentation
If conflict exists, please inform Hub Architecture
Refer to Drawing Issue Register for latest revision issue

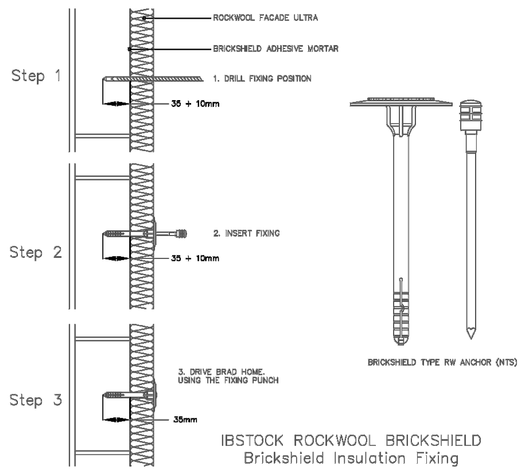

IBSTOCK ROCKWOOL BRICKSHIELD
Brickshield Insulation Fixing

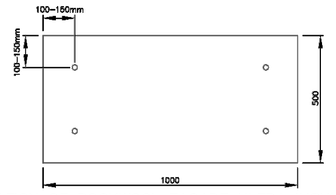

ELEVATION OF ROCKWOOL FACADE ULTRA INSULATION
SHOWING FIXING POSITIONS

IBSTOCK building sustainability	Project: IBSTOCK BRICK	Title: IBSTOCK ROCKWOOL BRICKSHIELD STANDARD DETAILS	Drawn: Daniel Spencer Date: 23/09/2009 Scale: — Checked:
Copyright © Ibstock Brick Limited The information shown on this drawing is sent in confidence and must not be used for any purpose other than that for which it is supplied. Refer any omissions or errors to Ibstock Brick Ltd. Do not scale from this drawing. Modify on CAD only.	Ibstock bricks shown on this drawing are designed and manufactured under the control of Ibstock's C.I.C.S. registered Quality Assurance scheme which complies with B.S. EA, I.S.O. 9001.	Dwg No: CAD09/07-05	Rev:

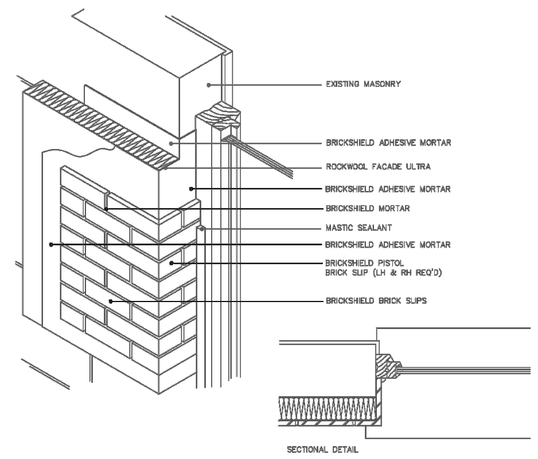

IBSTOCK ROCKWOOL BRICKSHIELD
Jamb Detail: (Brick Slip Non–Insulated Return 1)

IBSTOCK building sustainability	Project: IBSTOCK BRICK	Title: IBSTOCK ROCKWOOL BRICKSHIELD STANDARD DETAILS	Drawn: Daniel Spencer Date: 23/09/2009 Scale: — Checked:
Copyright © Ibstock Brick Limited The information shown on this drawing is sent in confidence and must not be used for any purpose other than that for which it is supplied. Refer any omissions or errors to Ibstock Brick Ltd. Do not scale from this drawing. Modify on CAD only.	Ibstock bricks shown on this drawing are designed and manufactured under the control of Ibstock's C.I.C.S. registered Quality Assurance scheme which complies with B.S. EA, I.S.O. 9001.	Dwg No: CAD09/07-07	Rev:

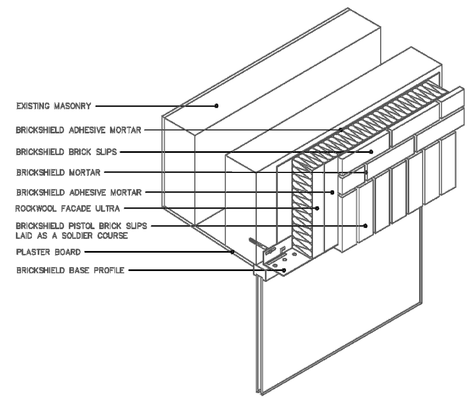

IBSTOCK ROCKWOOL BRICKSHIELD
Window Head Detail 1

IBSTOCK building sustainability	Project: IBSTOCK BRICK	Title: IBSTOCK ROCKWOOL BRICKSHIELD STANDARD DETAILS	Drawn: Daniel Spencer Date: 23/09/2009 Scale: — Checked:
Copyright © Ibstock Brick Limited The information shown on this drawing is sent in confidence and must not be used for any purpose other than that for which it is supplied. Refer any omissions or errors to Ibstock Brick Ltd. Do not scale from this drawing. Modify on CAD only.	Ibstock bricks shown on this drawing are designed and manufactured under the control of Ibstock's C.I.C.S. registered Quality Assurance scheme which complies with B.S. EA, I.S.O. 9001.	Dwg No: CAD09/07-12	Rev:

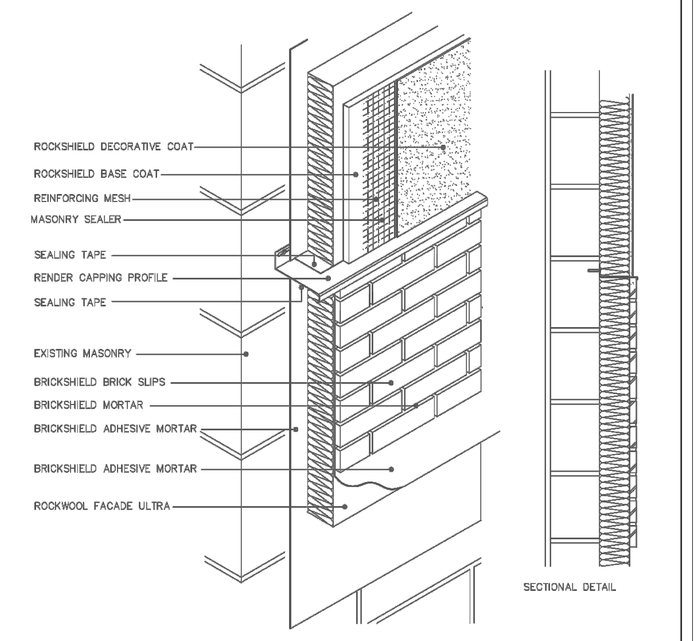

IBSTOCK ROCKWOOL BRICKSHIELD
BRICK TO RENDER DETAIL

IBSTOCK building sustainability	Product: IBSTOCK BRICK	Title: IBSTOCK ROCKWOOL BRICKSHIELD STANDARD DETAILS	Drawn: Daniel Spencer Date: 23/09/2009 Scale: — Checked:
Copyright © Ibstock Brick Limited The information shown on this drawing is sent in confidence and must not be used for any purpose other than that for which it is supplied. Refer any omissions or errors to Ibstock Brick Ltd. Do not scale from this drawing. Modify on CAD only.	Ibstock bricks shown on this drawing are designed and manufactured under the control of Ibstock's C.I.C.S. registered Quality Assurance scheme which complies with B.S. EA, I.S.O. 9001.	Dwg No: CAD09/07-14	Rev:

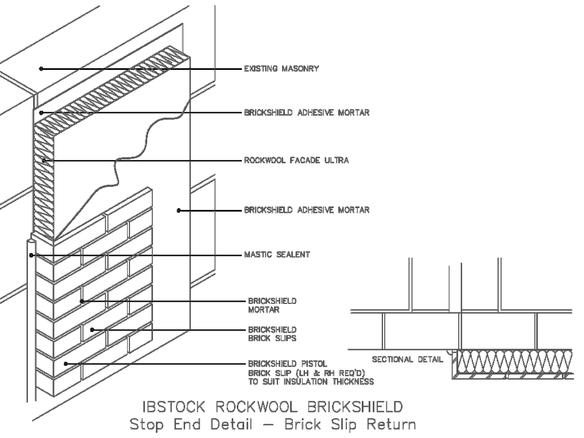

IBSTOCK ROCKWOOL BRICKSHIELD
Stop End Detail – Brick Slip Return

IBSTOCK building sustainability	Project: IBSTOCK BRICK	Title: IBSTOCK ROCKWOOL BRICKSHIELD STANDARD DETAILS	Drawn: Daniel Spencer Date: 23/09/2009 Scale: — Checked:
Copyright © Ibstock Brick Limited The information shown on this drawing is sent in confidence and must not be used for any purpose other than that for which it is supplied. Refer any omissions or errors to Ibstock Brick Ltd. Do not scale from this drawing. Modify on CAD only.	Ibstock bricks shown on this drawing are designed and manufactured under the control of Ibstock's C.I.C.S. registered Quality Assurance scheme which complies with B.S. EA, I.S.O. 9001.	Dwg No: CAD09/07-01	Rev: B

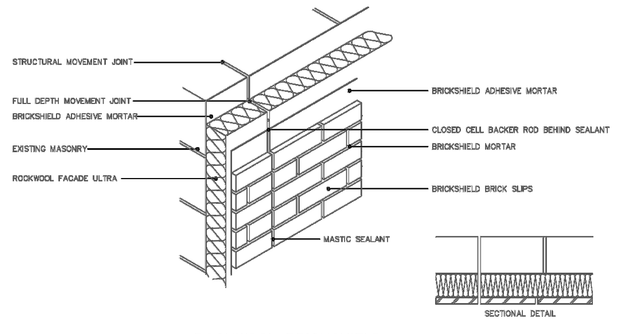

ROCKWOOL BRICKSHIELD
Full Depth Movement Joint 1

IBSTOCK building sustainability	Project: IBSTOCK BRICK	Title: IBSTOCK ROCKWOOL BRICKSHIELD STANDARD DETAILS	Drawn: Daniel Spencer Date: 23/09/2009 Scale: — Checked:
Copyright © Ibstock Brick Limited The information shown on this drawing is sent in confidence and must not be used for any purpose other than that for which it is supplied. Refer any omissions or errors to Ibstock Brick Ltd. Do not scale from this drawing. Modify on CAD only.	Ibstock bricks shown on this drawing are designed and manufactured under the control of Ibstock's C.I.C.S. registered Quality Assurance scheme which complies with B.S. EA, I.S.O. 9001.	Dwg No: CAD09/07-06	Rev:

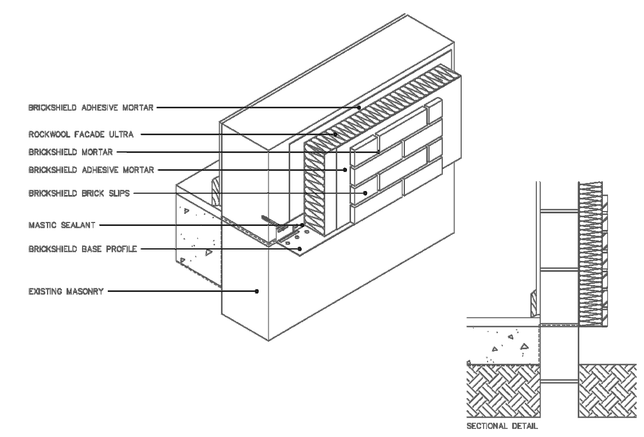

IBSTOCK ROCKWOOL BRICKSHIELD
Base Detail

IBSTOCK building sustainability	Project: IBSTOCK BRICK	Title: IBSTOCK ROCKWOOL BRICKSHIELD STANDARD DETAILS	Drawn: Daniel Spencer Date: 23/09/2009 Scale: — Checked:
Copyright © Ibstock Brick Limited The information shown on this drawing is sent in confidence and must not be used for any purpose other than that for which it is supplied. Refer any omissions or errors to Ibstock Brick Ltd. Do not scale from this drawing. Modify on CAD only.	Ibstock bricks shown on this drawing are designed and manufactured under the control of Ibstock's C.I.C.S. registered Quality Assurance scheme which complies with B.S. EA, I.S.O. 9001.	Dwg No: CAD09/07-09	Rev:

Revisions:
-

hub architecture
hub architecture Ltd.
Registered in England and Wales
Company No. 7942532
tel. 07894 669 432
email - info@hubarchitecture.co.uk
website - www.hubarchitecture.co.uk

Residential Design
Commercial Design
Feasibility Studies
Planning Applications & Conditions
Building Regulation Submissions
Site Inspections
Listed & Heritage Buildings
Refurbishment Design & Advice
Building Surveys

Client:
GB Building Solutions Ltd

Project:
Wythenshaw Eco Project
EWI Installation, Window Replacement and Biomass Plant Extension

Dwg Title:
Technical Details
Rockwool Brickshield

Copyright hub architecture Ltd

Status - Planning - not for construction

Scale - NTS @ A1	Dwg No. - HUB097.BEC.PS.07
Date: April 2014	Rev: -

Copyright hub architecture Ltd