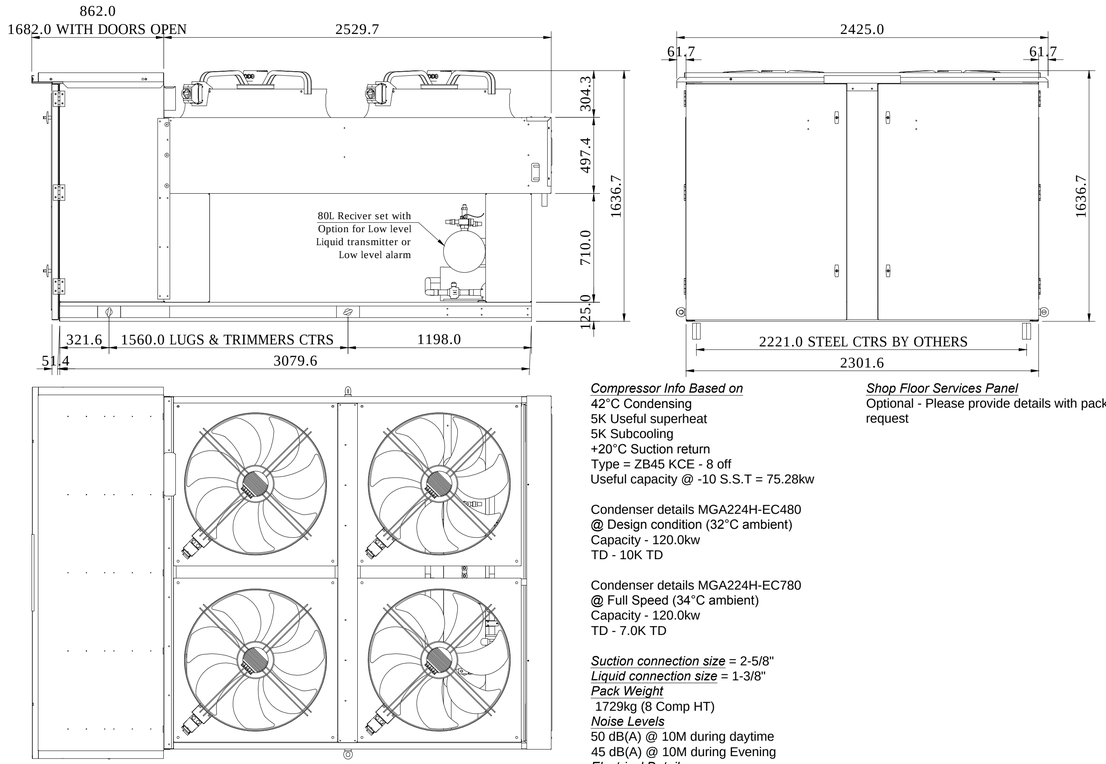

Compressor Info Based on
42°C Condensing
5K Useful superheat
5K Subcooling
+20°C Suction return
Type = ZB45 KCE - 8 off
Useful capacity @ -10 S.S.T = 75.28kw

Condenser details MGA224H-EC480
@ Design condition (32°C ambient)
Capacity - 120.0kw
TD - 10K TD

Condenser details MGA224H-EC780
@ Full Speed (34°C ambient)
Capacity - 120.0kw
TD - 7.0K TD

Suction connection size = 2-5/8"
Liquid connection size = 1-3/8"
Pack Weight
1729kg (8 Comp HT)
Noise Levels
50 dB(A) @ 10M during daytime
45 dB(A) @ 10M during Evening
Electrical Details
8 x Compressors ZB45 FLC @ design = 90A
LRC per compressor = 74A
Maximum of 10 starts per hour per compressor
Loadings do not include for
Cabinets/Coldrooms

Shop Floor Services Panel
Optional - Please provide details with pack request

Lifting Details

The unit should be lifted using the following method,

>Attach shackles to lifting eyes on main steel channels

>Equal length strops to be attached to shackles

>Spreader bar to be used (2500mm long x 2400mm

wide)

PROPOSED PLANT DETAILS
SCALE 1:20

RAC
SMUZ4064

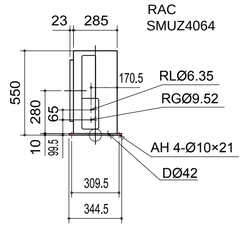

RAC
SMUZ4062

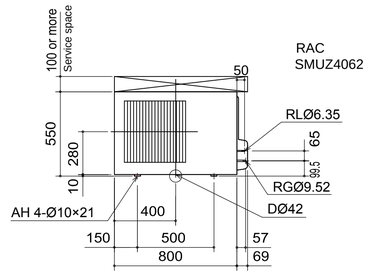

RAC
SMUZ4061

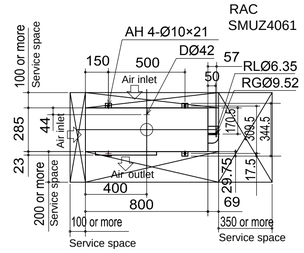

OFFICE PROPOSAL
UNIT MODEL MUZ-GE42-VA
SYSTEM DBA 42Dba @ 1
SCALE 1 : 20

SPUHZ5084

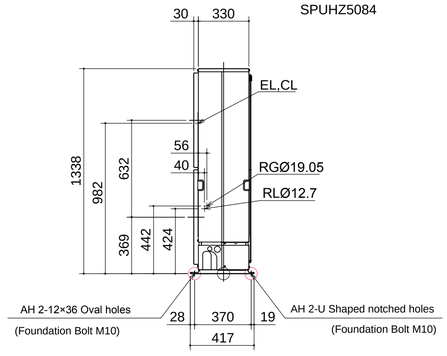

SHOP FLOOR PROPOSAL
UNIT MODEL PUHZ-RP250-YKA
SYSTEM DBA 59Dba @ 1
SCALE 1 : 20

SPUHZ5082

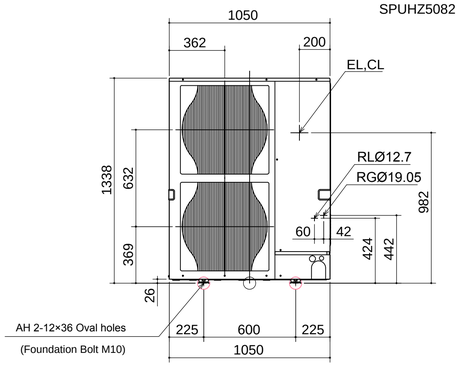

SPUHZ5081

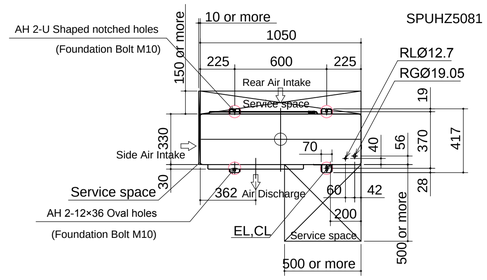

VALE (UK) LIMITED
Kitling Road
Knowsley Business Park
Prescot
Merseyside
L34 9JA
Tel: 0151 546 4684
Fax: 0151 548 2420
Email: shopfit@valeuk.co.uk

NOTE:
DRAWING BASED ON INHERITED INFORMATION. ALL DIMENSIONS TO BE CHECKED ON SITE PRIOR TO ANY WORK COMMENCING.

FOR PLANNING PURPOSES

Client:
VALE UK

Project:
1083 STOCKPORT ROAD
LEVENSHULME
MANCHESTER, M19 2RE

Title:
PROPOSED
PLANT DETAILS
PLANT APPLICATION

Project:	Drawing No:
LEV	**(P)103-1**
Scale: **1:20@A1**	Date: 01.11.2013
Drawn By: AA	Checked By: DJF