This drawing is the property of Technical Signs and must not be reproduced in part or in full without prior consent of Technical Signs.

Proposed



Front Elevation
Scale 1:50

Menu - 1 off
Scale 1:10
1.2mm descaled stainless steel box is finished *Farrow & Ball* Hague Blue.
Front and back are fitted with a continuous hinge and cam locks.
Window is backed up with a 6mm clear glass panel.
Fret cut text has opal 050 acrylic.
3mm 1TL2 opal acrylic insert is fitted with a pin board.
Internally illuminated via low energy white LEDs.
Screw fixed to the wall.

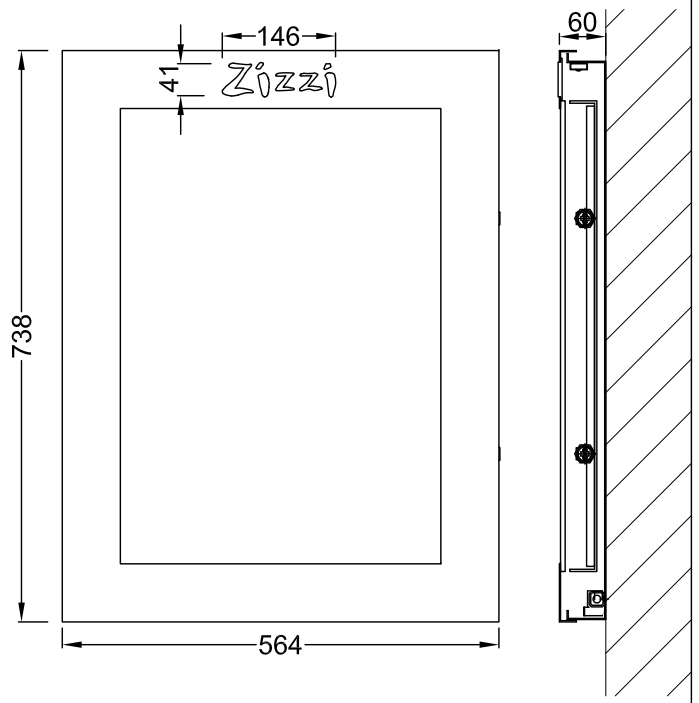

Projected sign - 1 off
Scale 1:10
Mild steel inner frame hangs from a black mild steel projecting arm.
Outer frame has 1.2mm descaled stainless steel rims and returns finished Farrow & Ball Hague Blue.
Outer frame holds 5mm 2765 cream plexiglass panels with applied vinyl printed grey avery 759 and pink PMS 215c.
Internal illumination with low energy white LEDs.

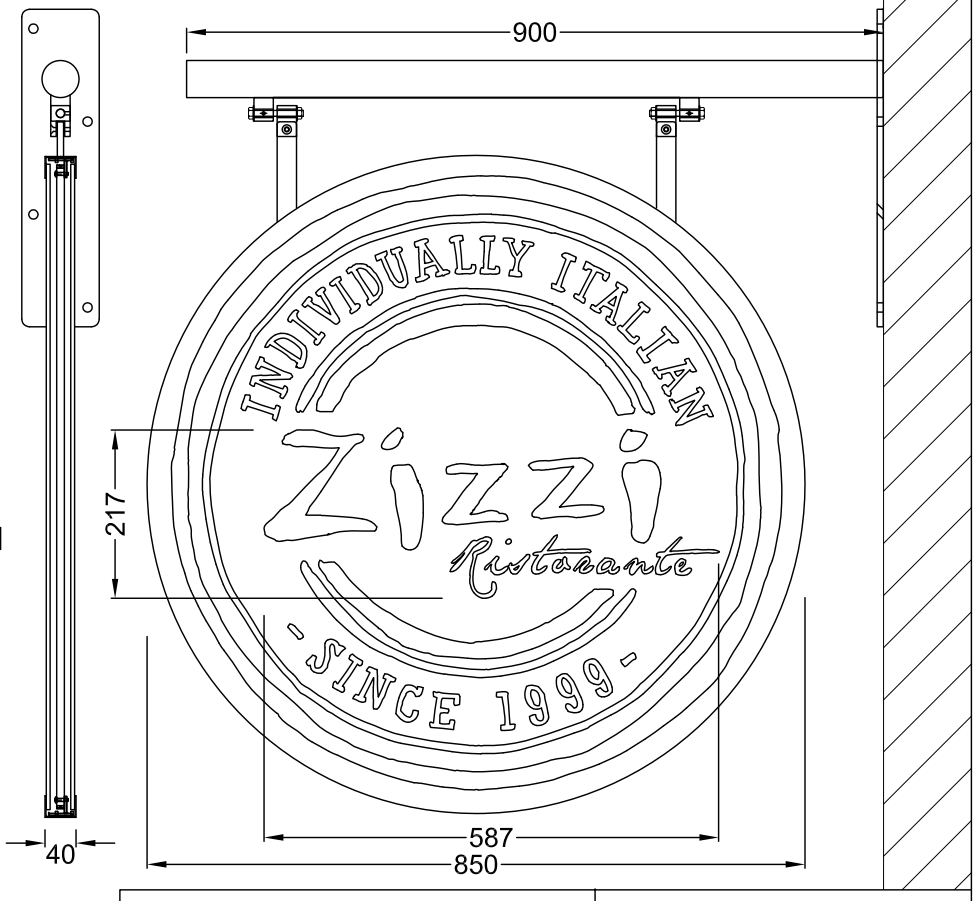

A	Proj sign thickness reduced	11/04/14

Technical Signs
Floor 1 - Unit 3
Hille Business Centre
132 St Albans Road
Watford, Herts, WD24 4AE
Tel: 01923 811999
Fax: 01923 811998
E-mail: info@technicalsigns.co.uk

Client	Zizzi
Address/Job details	Unit 3 19-21 Piccadilly Manchester M1 1LR Proposed Signage
Job No	
Drawn by	DN
Date	31/03/14
Scale	As specified (A3)
Drawing No	415075-3
Rev	A