BRITISH STANDARD 5837 TREE SURVEYS ARBORICULTURAL IMPLICATION STUDIES TPO/PLANNIG ADVICE/ PROJECT MANAGEMENT
TREE INVENTORIES AND RISK ASSESSMENTS WOODLAND MANAGEMENT PLANS TREE PLANTING SCHEMES TPO RE-SURVEY






ARBORICULTURAL METHOD STATEMENT

PROPOSED DEVELOPMENT

AT

HAVELEY CIRCLE/HAVELEY ROAD
MANCHESTER
M23 8FR

Author: C. Salisbury
Date: 30 April 2014
Ref: TRE/HCHR

Mulberry
Adamson House, Towers Business Park, Wilmslow Road, Didsbury, M20 2YY

T 0161 955 3628
F 0161 955 4201
E info@mulberrytmc.co.uk

www.mulberrytmc.co.uk

1.0 Discussion

1.1 The majority of the root system, of a tree, is in the surface 600mm of the soil, extending radically for distances frequently in excess of the trees height. Beyond the main structural roots (close to the base of the trunk), the root system rapidly sub-divides into smaller diameter roots: off this main system, a mass of fine roots develops.

1.2 The shape of the main structural roots develops in response to the need for the tree to have physical stability. Beyond these major roots, root growth and development is influenced by the availability of water and nutrients. Unless conditions are uniform around the tree, which would be unusual, the extent of the root system will be very irregular and difficult to predict. It will not generally show the symmetry seen in the branch system.

1.3 The parts of the root system, which are active in water and nutrient uptake, are very fine, typically less than 0.5mm diameter. They are short lived, developing in response to the needs of the tree, with the majority dying each winter. It is *essential* that conditions in the soil remain conducive to the healthy growth of these fine roots so that the water and nutrients necessary for healthy tree growth can be absorbed.

1.4 All parts of the root system, but especially the fine roots, are vulnerable to damage. Once they are damaged, water and nutrient uptake will be restricted until new roots have regenerated. Vigorous young trees will be capable of rapid regeneration but over mature trees will respond slowly, *if at all*.

1.5 In order to live and grow, roots need oxygen from the soil. Respiration by the roots and other soil organisms depletes this oxygen and increases carbon dioxide levels in the soil; a correct balance of these gases is normally maintained by diffusion between the soil and the atmosphere. Anything, which disturbs this balance, will affect the condition of the root system.

1.6 The factors that most commonly affect this diffusion adversely, and therefore damage roots, are the following: -

a) Compaction of the ground, which reduces the space between soil particles. This is particularly important on clay soils. A single passage by heavy equipment on clay soils or storage of heavy materials can cause significant damage.
b) Changing soil levels, even for a few weeks.
c) Covering the root area with impervious surfaces.
d) A rise in the level of the water table. Roots can tolerate submersion for short periods. But a permanent rise will deplete the soil of oxygen.

1.7 Serious damage is often caused during preliminary site works by stripping the topsoil. For this reason, such works should be avoided until protective fencing has been erected.

1.8 Excavations in the rooting area can severe roots. As the majority of roots are in the surface 600mm, even shallow excavations can cause damage.

1.9 Excavations for foundations, landscaping or service trenches are usually sufficiently deep to severe most of the roots, and it should therefore be assumed that all parts of the root system beyond the excavation would no longer serve the tree.

1.10 Excavation or soil stripping which severe or damage the roots may impair the stability of the tree and make it dangerous.

2.0 Method Statement

Before any form of development commences on the site the following works should be undertaken: -

2.1 Tree Works

Tree No.	Proposed Works
T1	Fell
T2	No Work Required
T3	No Work Required
T4	No Work Required
T5	No Work Required

2.2 Protective Fencing

All fencing used on the site should fully comply with BS 5837:2012 (Trees in Relation to Construction – Recommendations).

2.2.1 The fencing should be strong and suitable for local conditions. It should also take into account the degree of construction activity on the site.

2.2.2 The fencing should be at least 2.3m in height and should be erected with both a vertical and horizontal scaffolding framework capable of withstanding impact, with vertical tubes spaced at a maximum of 3 m. This should support either weldmesh panels which should be securely fixed with wire or scaffold clamps.

2.2.3 Notices should also be erected on the fencing stating ‘Protected Area - No operations within fenced area’.

2.2.4 The positioning of the protective fencing is also very important and should be erected in the proposed location identified in Appendix One. Once the fence has been erected it should never be crossed and particular care should be taken to store any materials or soil within the protected area.

2.3 Additional Precautions Outside Fences Areas

2.3.1 Oil, bitumen, cement or other material likely to cause damage to the tree will not be stacked or discharged within 10m of the trees stem or within the protective area. Also materials in general will not be stacked or discharged within the exclusion zone.

2.3.2 Concrete mixing and washing will not be carried out within 10m of any retained trees.

2.3.3 Fires will not be lit beneath the foliage or in a position where the flames could extend to within 5m of the foliage, branches or trunk. If the fire is large then this may necessitate a distance of at least 20m.

2.3.4 Trees that are to be retained will not be used as anchorage for equipment.

2.3.5 Notice boards, telephone cables, or other services will not be attached to any part of the retained tree.

2.3.6 Care should be taken when using cranes or other equipment near the canopy of the retained trees. Also any trees to be felled in proximity to the retained trees should be done so with particular care.

2.4 Summary of Methodology for the Protection of the Trees

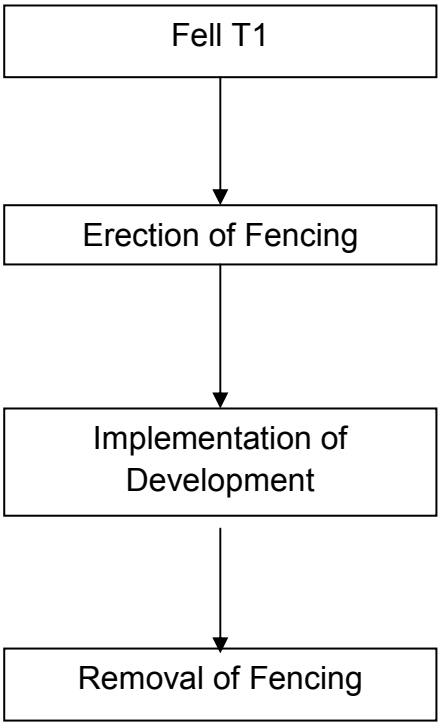

Appendix One

Tree Plan

METHOD STATEMENT PLAN

HAVELEY CIRCLE WYTHENSHAME

SCALE: 1:200 @A1 | DATE: APRIL 2014

DRAWING: HC/MS/01

mulberry

Root Protection Area

Protective Fencing

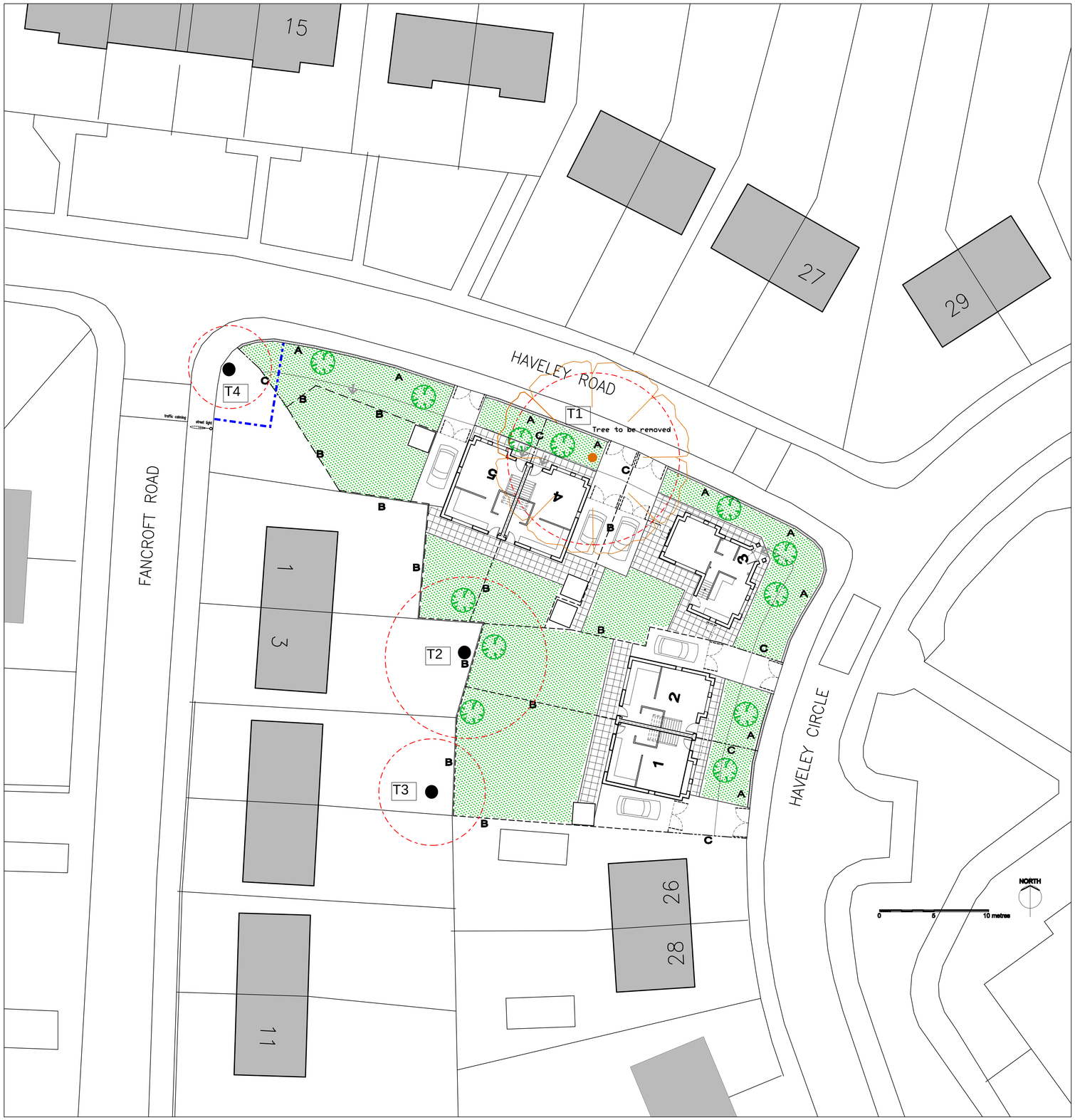

SITE PLAN 1:200

Appendix Two

Tree Protection Fencing

Tree Protection Fencing (BS5837: 2012)

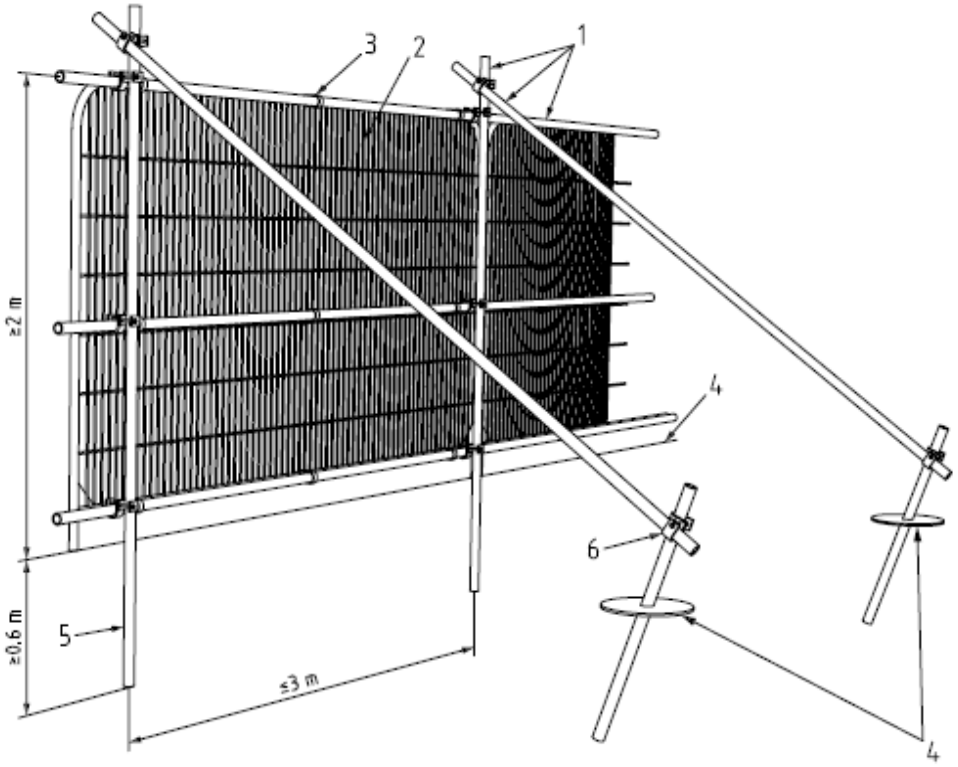

Key

1 Standard scaffold poles
2 Heavy gauge 2 m tall galvanized tube and welded mesh infill panels
3 Panels secured to uprights and cross-members with wire ties
4 Ground level
5 Uprights driven into the ground until secure (minimum depth 0.6 m)
6 Standard scaffold clamps