- All information contained within this drawing is based upon hard copy plans provided by client. Cube architecture and design cannot be responsible for the accuracy or scale discrepancy of base plans supplied to them.
- This drawing shall not be reproduced without express written permission from Cube architecture and design.
- Title overlay drawings and ownership boundaries are produced using all reasonable endeavours. Cube architecture and design cannot be responsible for the accuracy or scale discrepancy of base plans supplied to them.

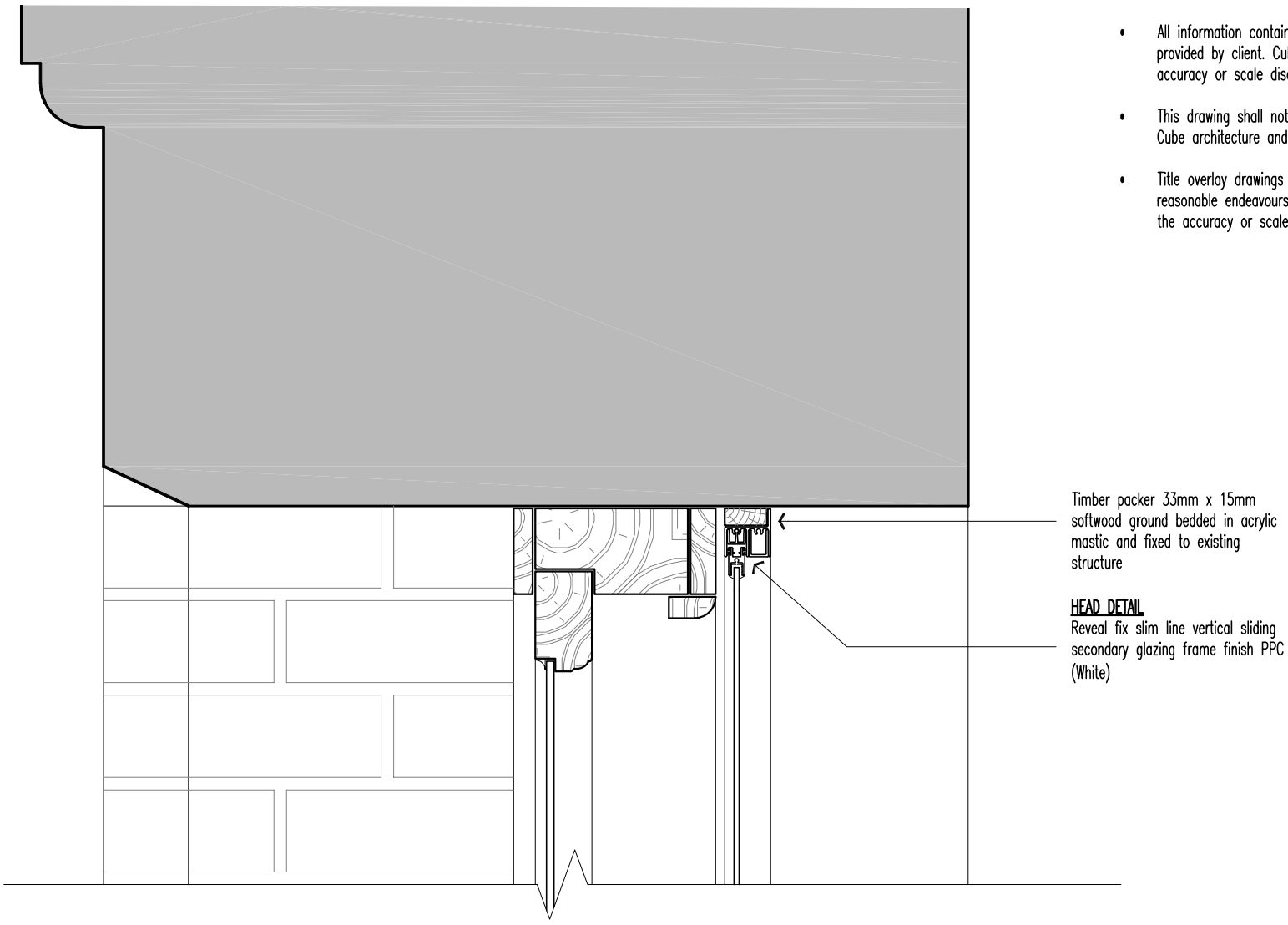

Existing timber sash windows to be carefully removed from existing openings for repair.

Carefully remove existing timber beading and existing/damaged glass.

Strip to bare timber using a non aggressive solvent based paint stripper.

Repair timber as necessary using a 'Windowcare' resin system and traditional spliced timber repair where necessary

Remove exiting pulleys/weights and cords, repair and reinstament as required to full working order. Renew all sash cords.

Remove existing ironmongery, clean/repair and refix to full working order

Clean all surfaces ready for decoration. Knot, prime, stop and apply2 undercoats and 2 coats full gloss paint finish in White

Fit draft strips (type to be agreed)

Re glaze with 6mm clear float glass using putty and existing repaired beading where possible pinned in place

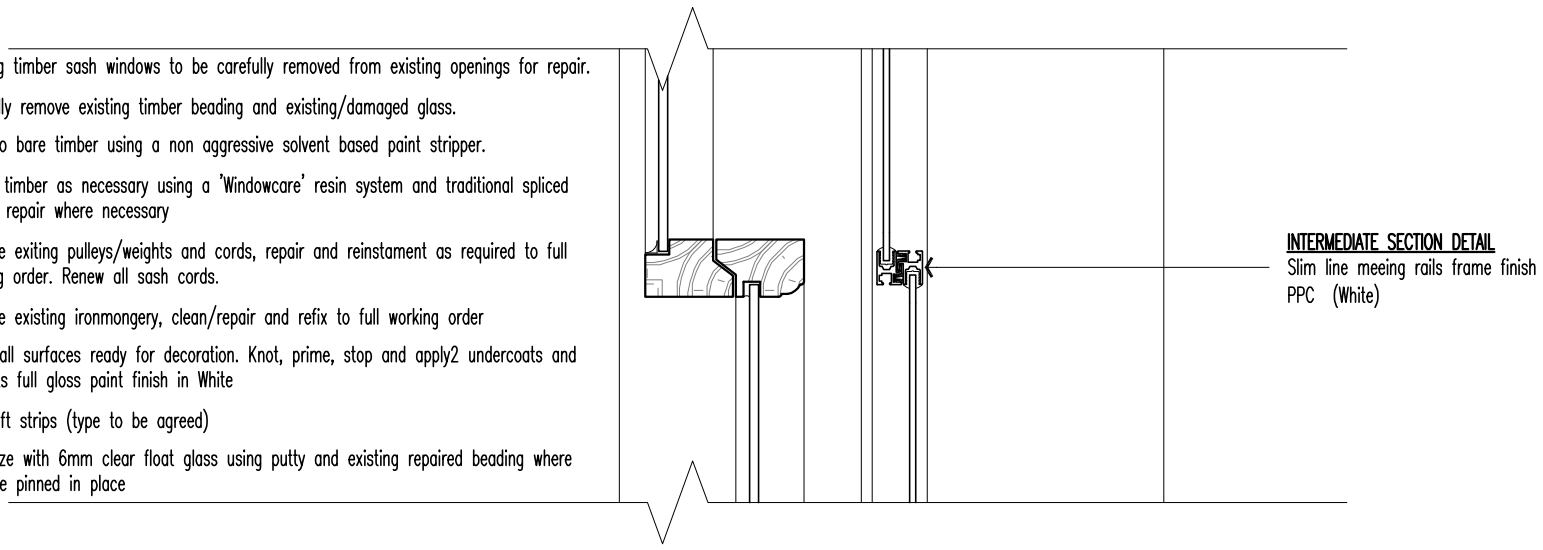

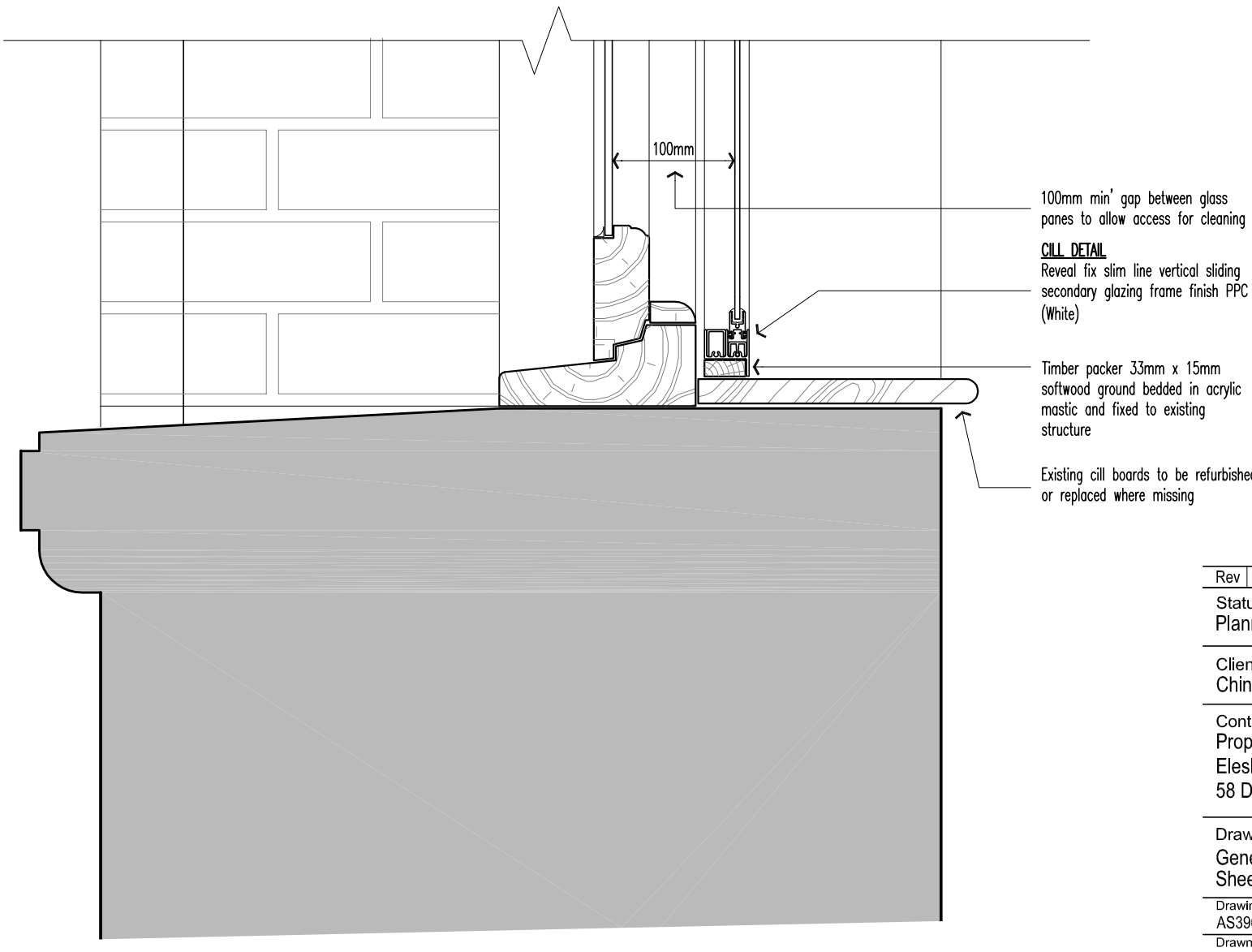

Rev	Description	Date	By

Status:
Planning

Client:
China Lane Developments

Contract:
Proposed New Cafe Bar
Eleska House
58 Dale Street Manchester

Drawing:
General Details
Sheet 1

Drawing No:	Revision:	Scales:
AS396-20		1:5@A3
Drawn:	Checked:	Date:
RMC		Sept '13

CUBE architecture and design
www.cubearchitecture.net
commercial house
clarence avenue
trafford park
m17 1qs
tel: 0161 848 5893

DO NOT scale from this drawing.

Existing timber sash windows to be carefully removed from existing openings for repair.

Carefully remove existing timber beading and existing/damaged glass.

Strip to bare timber using a non aggressive solvent based paint stripper.

Repair timber as necessary using a 'Windowcare' resin system and traditional spliced timber repair where necessary

Remove exiting pulleys/weights and cords, repair and reinstament as required to full working order. Renew all sash cords.

Remove existing ironmongery, clean/repair and refix to full working order

Clean all surfaces ready for decoration. Knot, prime, stop and apply2 undercoats and 2 coats full gloss paint finish in White

Fit draft strips (type to be agreed)

Re glaze with 6mm clear float glass using putty and existing repaired beading where possible pinned in place

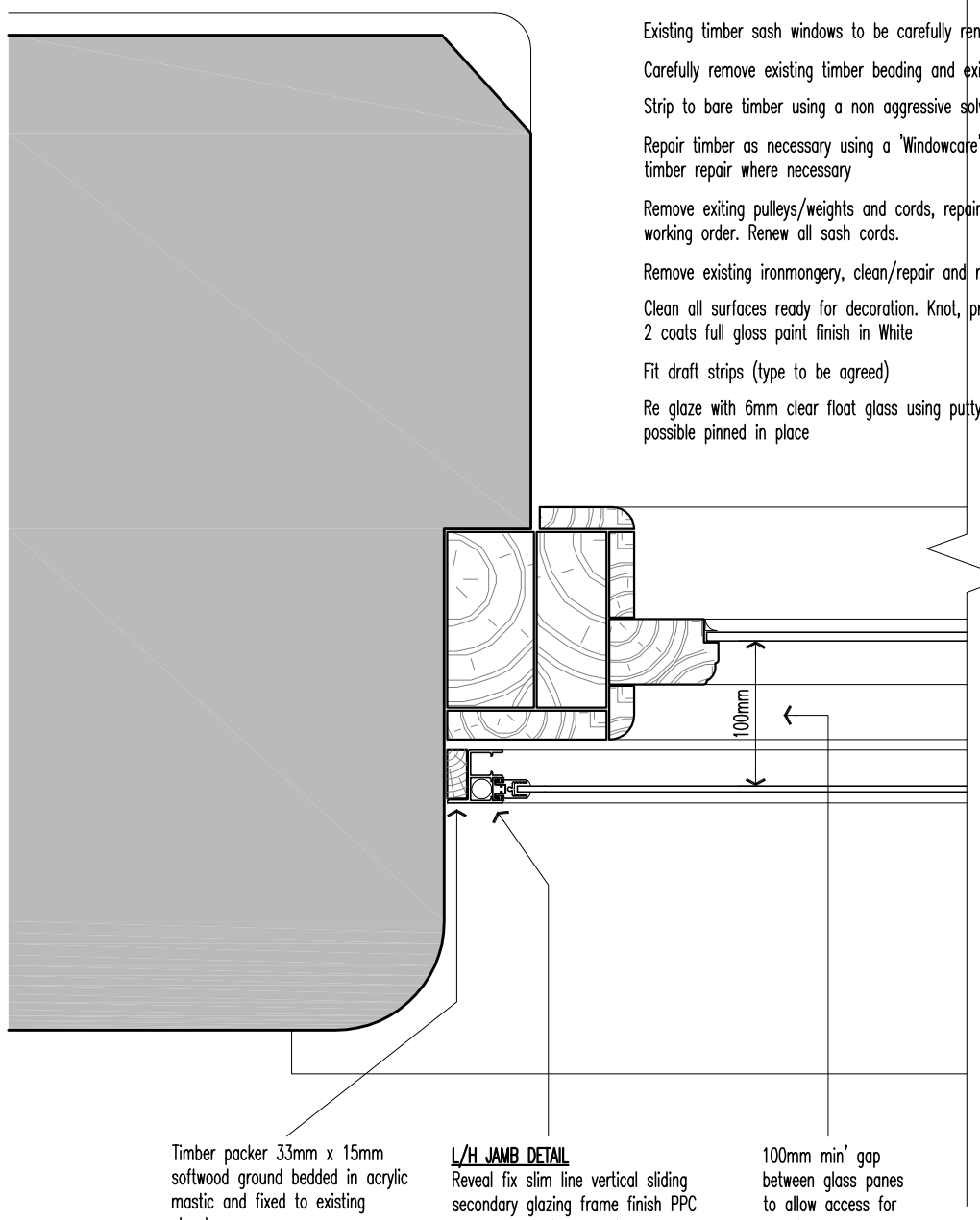

Timber packer 33mm x 15mm softwood ground bedded in acrylic mastic and fixed to existing structure

L/H JAMB DETAIL
Reveal fix slim line vertical sliding secondary glazing frame finish PPC to RAL 9005 (Jet Black) match sash window frame colour

100mm min' gap between glass panes to allow access for cleaning

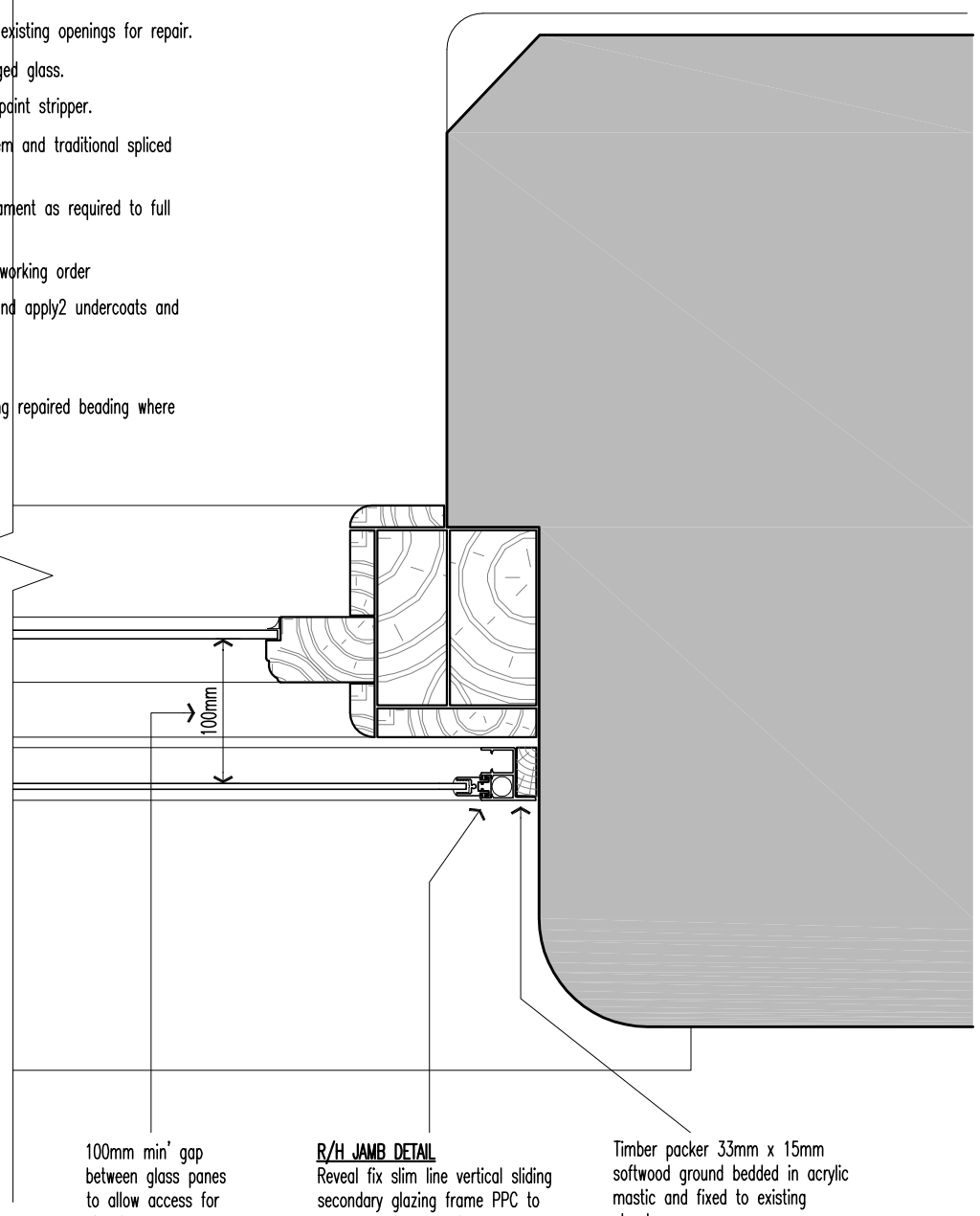

100mm min' gap between glass panes to allow access for cleaning

R/H JAMB DETAIL
Reveal fix slim line vertical sliding secondary glazing frame PPC to RAL 9005 (Jet Black) match sash window frame colour

Timber packer 33mm x 15mm softwood ground bedded in acrylic mastic and fixed to existing structure

Client:
China Lane Developments

Contract:
Proposed New Cafe Bar
Eleska House
58 Dale Street Manchester

Drawing:
General Details
Sheet 2

Status: Planning

Drawing No: AS398-21
Drawn: RMC
Revision:
Checked:
Scales: 1:5@A3
Date: Sept '13

CUBE architecture and design
www.cubearchitecture.net
commercial house
clarence avenue
trafford park
m17 1qs
tel: 0161 848 5893

DO NOT scale from this drawing.

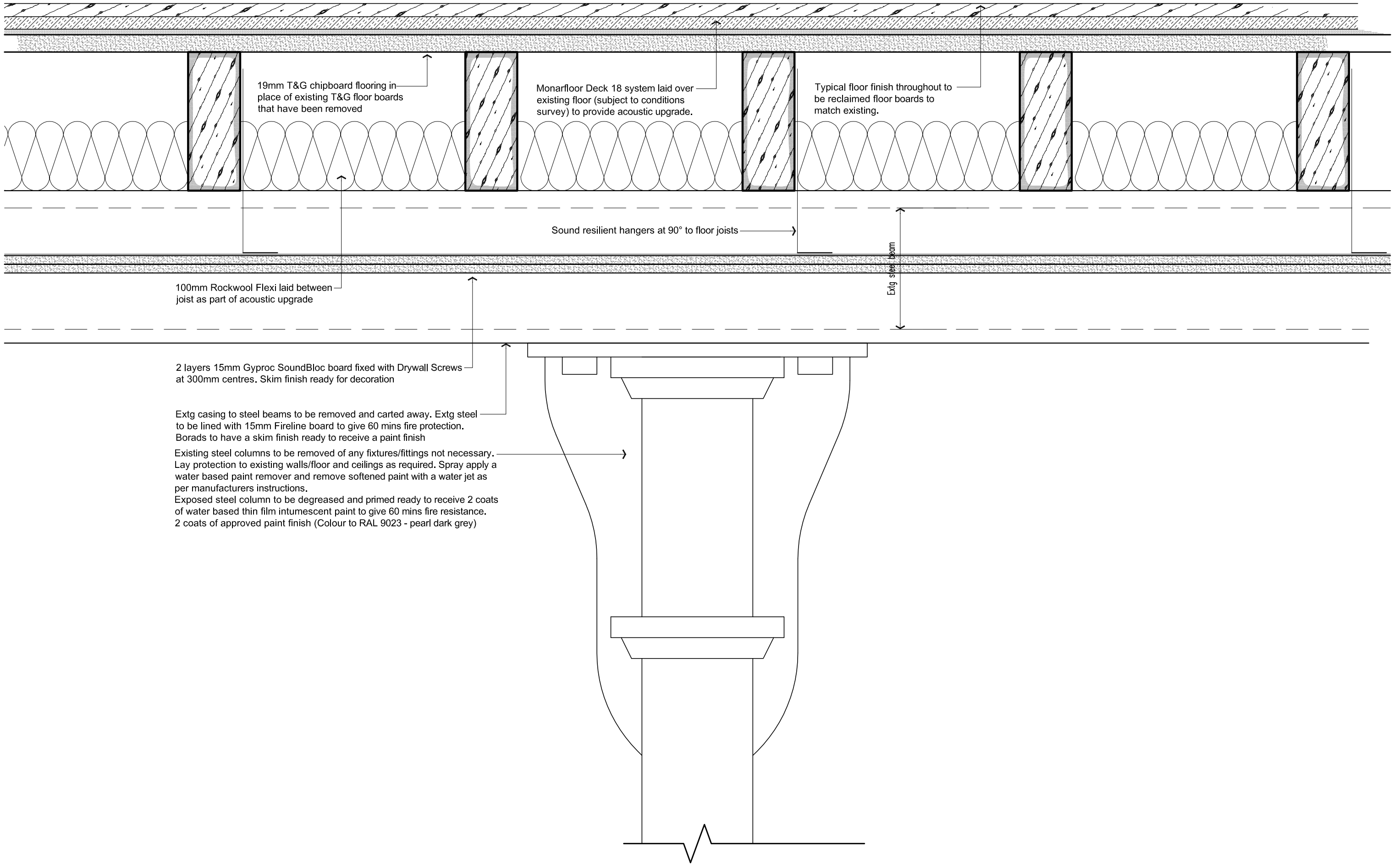

Client:
China Lane Developments

Contract:
Proposed New Cafe Bar
Eleska House
58 Dale Street Manchester

Drawing:
General Details
Sheet 3

Status: Planning

Drawing No: AS398-22
Drawn: RMC
Revision:
Checked:
Scales: 1:5@A3
Date: Sept '13

CUBE architecture and design
www.cubearchitecture.net
commercial house
clarence avenue
trafford park
m17 1qs
tel: 0161 848 5893

DO NOT scale from this drawing.