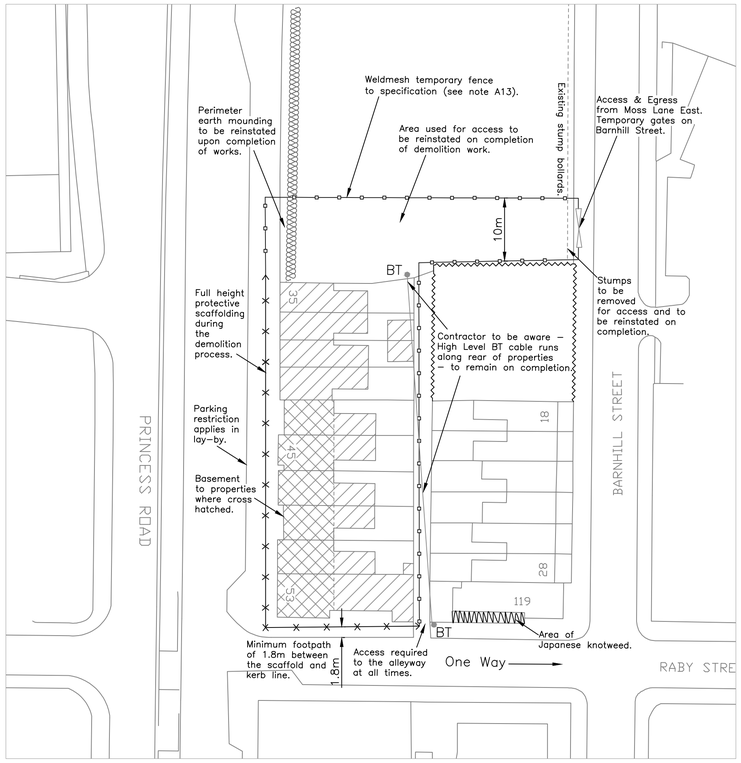

35–53, Princess Road – Existing

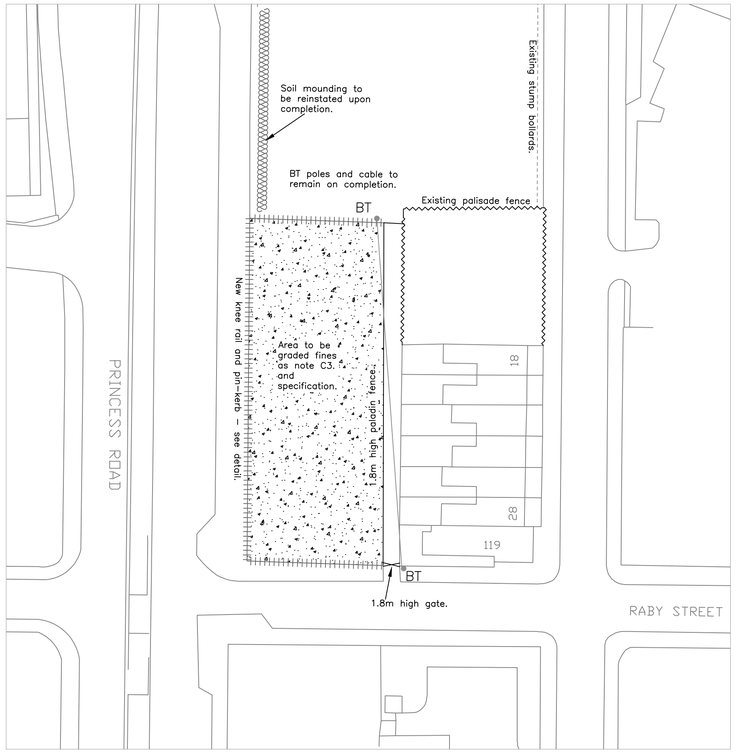

35–53, Princess Road – Proposed

SCOPE AND MANAGEMENT OF THE WORKS

B1. A pre–tender inspection must be carried out by the Contractor who must fully appraise the condition and structural complexity of the buildings to be demolished and make due allowance for the difficulties involved. Details shown on any archive drawings provided cannot be assumed to represent existing construction, without verification by contractor's site inspection.

B2. The Contractor must apply for and obtain any temporary footpath closures necessary for the safe completion of his works.

B3. The existing buildings to be demolished are shown on the plans. They are to be cleared of all fixtures, fittings, furnishings, equipment, debris and other unwanted items, which must be removed from site.

B4. All structures within the boundary lines are to be demolished as shown on the drawings and described in the Specification. All walls are to be taken down to 1.0m below ground level if appropriate and all foundations removed. All concrete paving, exg. areas of tarmac or hardstanding should be broken up and removed from site. The areas where foundations have been removed must be filled with imported clean granular material meeting the hardcore filling specification (clause D20/710A), not demolition rubble.

B5. Basements and underground voids to be cleared of debris, and basement floors punctured prior to filling with consolidated hardcore. See specification clause C20/430A.

B6. Existing manholes to be adjusted to suit final site levels.

B7. Street lights and BT Poles to remain.

B8. Access to site will only be via Barnhill Street from Moss Lane East.
Parking restrictions apply in lay–by on Princess Road.

SITE FINISH & BOUNDARY TREATMENT

C1. Any external paving or tarmac disturbed by the works should be restored to its pre–commencement condition. The Contractor is responsible for photographing and recording the condition of the site before he commences work.

C2. Finished edge levels to match existing ground levels. Surface to be smooth, without dips or irregularities which could cause ponding or preclude mowing.

C3. All areas within the boundary line to be left in a tidy condition. Areas where buildings, walls, paving and tarmac have been removed to be finished using the graded fines finish 100mm thick, as clause D20/740. Site to be rolled using minimum 3 passes of a vibrating roller. Finished edge levels to match existing ground levels. Surface to be approximately flat, without dips or irregularities which could cause ponding.

C4. Boundary treatment: Timber Knee–rail and pin kerb– see details on drawing 03. Contractor to include for a removable and lockable rail at a location agreed with the client, with hasp, staple and padlock each end.

C5. The area of land north of the properties to be demolished must be reinstated to its former condition upon completion of the works.

PROGRAMME

D1. Length of contract 18 weeks.

HEALTH & SAFETY HAZARDS

The scheme as drawn incorporates measures taken by the designer to minimise construction hazards where possible and practical. To assist the contractor in the formulation of control measures in his Construction Phase Plan, outline guidance is given below for main hazards which are known to remain:–

1) Possible live services. Obtain written confirmation of disconnections prior to commencement, make appropriate physical checks on site, CAT scan for exact location of known services or for suspected "rogue" services.
2) Asbestos (see notes A10, A11)– Act on asbestos report, comply with Control of Asbestos regulations, be vigilant for possible additional asbestos, use asbestos removal sub–contractor from MCC select list, get method statement approved and work checked by MCC Asbestos Group.
3) Falling objects or building collapse during demolition–Provide written method statement regarding method and sequence of work, protection, etc. Issue courtesy copy to the MCC Structural Engineer.
4) The properties are infested with pigeons and there are extensive deposists of guano, which must be dealt with by a designated specialist.

GENERAL NOTES

Address of property to be demolished:–

35–53, Princess Road, Moss Side, M14 4TE.
Works comprise the demolition of flats over shops, followed by site finishes and boundary fencing as described. To inspect the property during the pricing period, contact the Client Kath McVicker tel. no. 0161 219 6219.

A1. Refer to the Specification document and risk log in addition to the information given in these notes.

A2. All work will be carried out in accordance with the requirements of the Health and safety at Work Act, B.S.6187, 2000 and Guidance Notes GS29 Parts 1 to 4, Control of Asbestos at Work Regulations 2006 (including Revisions), The management of Health and Safety at Work Regulations 1999 & the CDM2 Regulations 2007.

A3. Generally, all statutory service providers will have been instructed to terminate their supplies to the site and remove any recoverable equipment, in advance of the Contract commencement. HOWEVER, the Contractor must allow for contacting the relevant authorities as soon as he is appointed, and to obtain written confirmations for completed disconnections.

A4 Disconnection of redundant drains – Dig out drains to 1m deep from building to the main and including capping off at the main. Backfill in hardcore to specification –see clause C20/240A.

A5. Retention of drains in use–see clause C20/250.

A6. The Contractor is to be responsible for the provision of a marked up site plan for the Health and Safety File on completion of the demolition, showing the following:

A6.1. The position of all drainage manholes.
A6.2. The location of all service termination points at the site boundaries.
A6.3. The location of all drain caps.
A6.4. The location of any underground obstructions or other features discovered during the removal of foundations and left in place at the direction of the Contract Administrator.

A7. The Contractor is to notify all adjacent property occupiers / owners of the intended demolition works and the anticipated start date.

A8. No site burning allowed.

A9. Contractor's signs with contact details to be erected at the Client's preferred locations. Signs warning of danger to the public to be erected at appropriate intervals around the site perimeters.

A10. Asbestos removal – see asbestos report and specification clauses 390A & 391A.

A11. Contractor to allow a cost as IDENTIFIED RISK for removal of asbestos which is additional to quantities identified in the report.

A12. The Contractor shall assume that cavity fill material is present in all external walls and must allow for its removal in accordance with current health & safety regulations.

A13. The Contractor must provide and erect protective fencing around each site during the contract.
2.4m high weldmesh fencing supported by posts as the following alternatives: –
Type 1 – 150x150min. size timber or suitable steel section posts at 2.4m c/c, cast into concrete at their bases.
Type 2 – 175–50min size timber supported at 2.4m centres by steel drums filled with concrete.
1 pair of secured gates shall be provided in each demolition area, at a location to be agreed with the Supervising officer.
Free standing "Heras" type fencing will not be permitted except as noted.

A14. Where it is necessary to puncture the pavement to install fence posts, the contractor must apply to the Highways Engineer Tel. 0161 908 5764 for a temporary closure and to complete a New Road & Street Act Certificate. Contractor to check to ensure that no services could be damaged by these excavations. Contractor to include for providing temporary diversions for pedestrians as required by the Highways Engineer. Pavement to be made good on completion to the satisfaction of the Highways Department.

A15. No crusher will be permitted on site.

A16. No weekend working will be allowed except under exceptional circumstances, and with the permission of the Contract Administrator.The Contractor shall work between 08.00am and 16.30pm, Monday to Friday.

A17. The Contractor must provide all necessary hard standings for the operation of mechanical plant.

A18. Contractor to provide all information needed for the Health and Safety File to the CDM Co–ordinator by the date of practical completion.

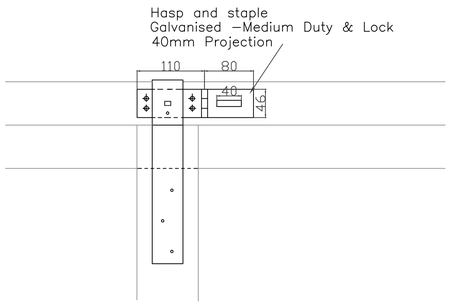

HASP & STAPLE DETAIL NTS





Paladin fence Panel
The fence panels feature pressed 'V' forms containing additional 4mm diameter wires for the full panel width for strength, rigidity and sophisticated good looks whilst providing a costeffective anti–intruder barrier.
Mesh pattern: varies to 50x50mm maximum, welded at each intersection.
Horizontal wires: 3mm diameter at 50mm centres with additional 4mm diameter in the 'V' beams
Vertical wires: 3mm diameter at 50mm and 12.5mm centres
I/V = 8.03 cm3
Presentation:
0.9 – 1.2 – 1.8m panels have 2 'V' forms
2.0 – 2.4m panels have 3 'V' forms
Recommended post system
Paladin Fencing
– posts pitched at 2.975m centres
– post size 60x60x2mm RHS
– 80x60x2.5mm RHS for multi–lift fences up to 4.0m high
– utilise 25x5mm continuos flat clamp bars to secure the overlapped fence panels to the front face of the fence posts.
Coating techniques
Paladin fencing panels are made out of galvanised wires (min. 40 g/m2). An adhesion coating is given for a perfect adhesion with the polyester coating (min. 100 micron).
The fence posts are polyester powder coated with a galvanised substrate in accordance with Euro norm 10147 (min. 60 micron).

Paladin Fence & Gate Details

KEY

- Temporary weldmesh fencing.
- New knee rail and pin–kerb – see details.
- Existing fence to remain.
- Line of existing stump bollards to remain on completion.
- Line of full height protective scaffolding.
- Existing soil mounding.
- 1.8m High Paladin Fence.
- Buildings to be demolished.
- Basements.
- Area to be graded fines.

BLOCKS HATCHED TO BE DEMOLISHED

ALL ROAD/PAVING TO BE PLATED AND PROTECTED WHEN ACCESSING THE SITE

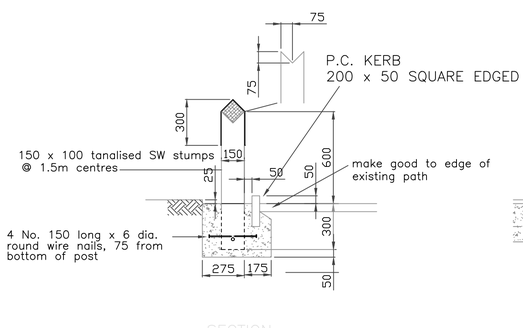

SECTION

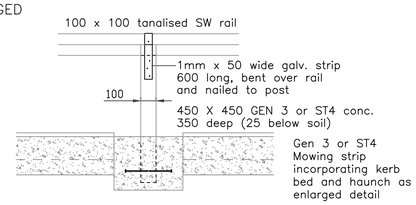

ELEVATION

TIMBER KNEE RAIL DETAIL 1:20 (for location see drg. 99/02)
For Option 2 mowing strip not required.

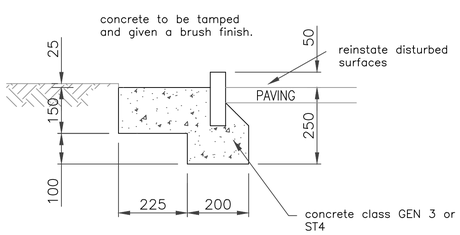

MOWING STRIP & PIN KERB NTS

N

This drawing has been reproduced from the Ordnance Survey mapping with the permission of The Controller of Her Majesty's Stationery Office Crown copyright. Unauthorised reproduction infringes Crown copyright and may lead to prosecution or civil proceedings.

Rev	Description	Date	by	chkd
A	1.8m Paladin fence and gate added.	Feb.14	ML	

MANCHESTER CITY COUNCIL
Capital Programmes & Property Growth & Neighbourhoods Directorate
P.O. Box 532
Town Hall Ext.
Manchester
M60 2LA

JOB TITLE: 35-53 PRINCESS ROAD, DEMOLITION
DRAWING TITLE: SITE DETAILS

COMPUTER FILE	DATE	SCALE	DRAWN	CHECKED
	Oct. 13	1:1000 @A1	ML	

JOB NO.	DRAWING NO.	REVISION
VP/41844	99/02	A