TANSUN LIMITED

SORRENTO DOUBLE



Dimensions:

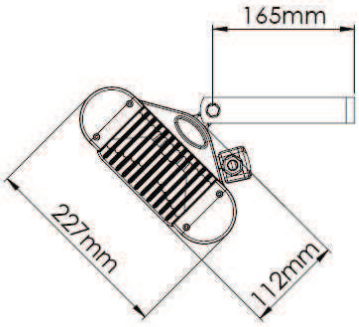

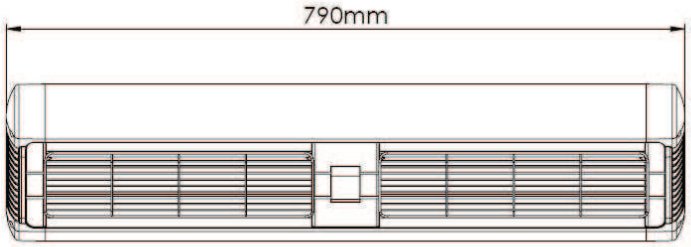

Specification:

Model Type	SOR 215IPD	SOR 220IPD
Voltage (Volts)	230	
No. of Lamps x Power (Watts)	2 x 1500	2 x 2000
Total Power (Watts)	3000	4000
Current per Lamp (Amps)	6.5	8.7
Total Current of Unit (Amps)	13.0	17.4
Min. mounting height from floor (m)	3.0	3.5
Min. distance from ceiling (m)	0.5	
Min. dist. from side wall (m)	1.0	
Dimensions - W x H x D (mm)	790 x 227 x 323	
Weight (kg)	5.6	
Ingress Protection	IP24	
Mounting:	Wall or ceiling hung	
Connection:	2 x Cords - 5.0m long with moulded UK or EU Schuko plugs	
Package Contents:	Heater with 2 x L-shaped wall mounting brackets and an instruction manual	

Bracket Type:

Supplied as standard with 2 x L-shaped wall brackets.



Gold Reflectors:

The Sorrento can be supplied with glare reducing gold reflectors (at an additional cost).

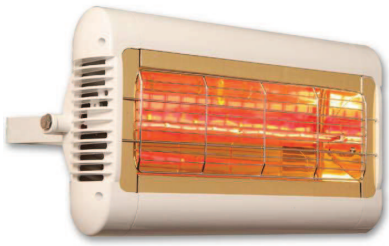

**Sorrento Single shown for illustration purposes*

Heat Coverage Pattern:

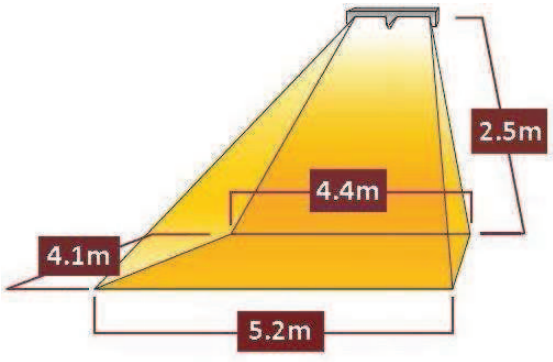

Heat Zone*
20m²

SORRENTO DOUBLE PART CODES:

Colour	Part No.
Black	SOR 2xxIPD yy BLK
Silver	SOR 2xxIPD yy SLV
White	SOR 2xxIPD yy WHT

xx = **15** 1500W
xx = **20** 2000W

yy = **UK** Cord with UK Plug
yy = **EU** Cord with EU Schuko Plug

*Heat zone will vary based on mounting height and angle of heater (overhead mounted heat zones will be different then this guide). This is a footprint of the total area covered but should be assumed that the surface temperature rise will decrease the further away from the source that is measured. Please use this as a guideline only and contact Tansun for a more detailed guide.

©Tansun Limited 2012