Phase	Requirements	Method
1 Prior to any construction works on site	Undertake tree felling and tree pruning works **Trees and groups to be felled (outlined in red):**	**Refer to section 3.5 of AIA/MS report.** All tree works to be carried out to BS3998: 2010: by suitably qualified and insured professional tree surgeons. **All items requiring felling are marked in red on the Tree Protection Plan.** **Tree pruning required is listed in the table below:** No. / Species / Pruning Required T5 / Ash / Remove major deadwood within the canopy. T7 / Yew / Crown clean to remove previous pruning stubs. T8 / Yew / Crown clean to remove previous pruning stubs. T20 / Sycamore / Crown-lift lower branches to provide approx. 4m clearance above ground level. This should be achieved primarily by removal of secondary and tertiary branches, and basal growth.
2 Prior to any construction works on site	Erection of protective fencing:	Protective fencing is to be erected in accordance with 3.6 of AIA/MS report. The fencing must comply with the positions shown in the Tree Protection Plan. No works, no storage of materials, no access, or any ground disturbance is to take place within the Tree Protection Barrier Fencing. **Fenced areas are to be treated as Construction Exclusion Zones.** Warning signs to be placed on all protective fencing. For large sections of fencing the signs must be placed at 20m intervals. Signs must be laminated and securely attached at all corners. Two signs are to be placed side by side; copies of which are attached within **Appendix A**.
3 Checking of protective fencing	Verify the location and quality of protective fencing is adequate prior to starting development works	Site visit with Arboricultural Consultant and Site Manager. Tree Officer to be pre-informed of visit. Protective fencing to be checked in terms of position and specification. In order for development to proceed the pro-forma in **Appendix B**, of the AIA/AMS report is to be completed and passed on to the local planning authority. **If the protective fencing is not adequately erected work cannot proceed until fencing is rectified.**
4 Start of development	Commencement of development	Protective fencing to remain in situ during development phase. Temporary access are to remain undisturbed.
5 If footpaths within Root Protection Areas.	Construction of footpath / pavement within root protection area of T11.	Access will be required to install the pavement – this will require moving the protective fencing back to the other side of the path **immediately** before construction. Hard surface areas are required for pedestrian access within and close to Root Protection Areas. A specification must be provided by an engineer. The following must be adhered to: • The design should not require excavation into the soil, other than removal of turf layer and other vegetation using hand tools. • The structure of the path/hard surface should be designed to avoid localised compaction. • The hard surface should be resistant to, or tolerant of deformation by tree roots, and should be set back from any stems by a minimum of 500mm. • A surface that provides permeability is desirable. Edge supports where required should comprise boarding with pegs or similar proprietary products where no ground excavation is required. Proprietary systems may be used such as a Geotextile Cellular Confinement System (see Appendix C) and Stable-Path (Appendix D).
6 Removal of existing hard surface areas.	Removal of hard surface areas (within nominal root protection areas) and re-instatement with soil.	Once all above ground structures have been removed, the hand digging / removal of existing hard surfaces within the RPA of trees being retained can be undertaken. The following sequence shall be followed: 1. The sections of hard surface requiring removal by hand are to be marked up using a spray can. Areas are to be hatched in spray paint and written with 'Root Protection Area' at regular intervals. 2. Prior to the commencement of works arboricultural supervision must be arranged. Supervision may not be necessary for all of the works, but for the start of works so workmen uncertaking works can be sufficiently briefed on how to undertake works. The Tree Officer shall also be informed so spot checks may be undertaken 3. Prior to the start of works a quantity of top soil must be made available and stored on site. The quantity of top soil is to be determined by the developer and shall be amount sufficient to provide a 150mm back fill of soil within all existing hard surface areas within tree root protection areas. 4. A single root protection area barrier is to be removed to allow access. 5. Work is to be undertaken in a 'work back' manner, i.e. vehicles can be parked on adjacent hard surface (for removal of debris and replacement of soil). All excavation of hard surfaces is to be undertaken by hand only, use of a jack hammer is acceptable. Sub-base material should be removed where possible, but if doing so causes disturbance to roots then minimal amounts should be removed and top soil placed on top. 6. Back filled top soil is to be laid to approximately the original level of the hard surfaces (though settlement should be accounted for). The surface may be compacted lightly. 7. If works are being undertaken **with arboricultural supervision** it is acceptable to use a mini-excavator under such supervision, though at any other time hand tools must be used.
7 Completion of main construction and undertaking of landscaping	Dismantling of protective fencing	It is essential that ground levels within the root protection areas are not altered, either by raising or lowering soil levels; even at the landscaping stage. Where trees are being retained on a slightly raised embankment that embankment must be retained and any ground level alterations must marry up with the edge of the protected area. Landscaping operations must not be undertaken in a manner that will impact trees. If new turf is required, any existing turf is to be removed using a hand operated turf removal machine, then new turf laid on the existing ground – a rotovator or similar soil tilling machinery must not be used within root protection areas. Where small divots or depressions are present it is acceptable to fill these with a good quality top-soil and lightly compact.

BS 5837 (2012) Tree Protection Fencing

NOTES

1. STANDARD SCAFFOLD POLES.
2. HEAVY GAUGE 2 M TALL GALVANIZED TUBE AND WELDED MESH INFILL PANELS.
3. PANELS SECURED TO UPRIGHTS AND CROSS-MEMBERS WITH WIRE TIES.
4. GROUND LEVEL.
5. UPRIGHTS DRIVEN INTO THE GROUND UNTIL SECURE (MINIMUM DEPTH 0.6 M).
6. STANDARD SCAFFOLD CLAMPS.

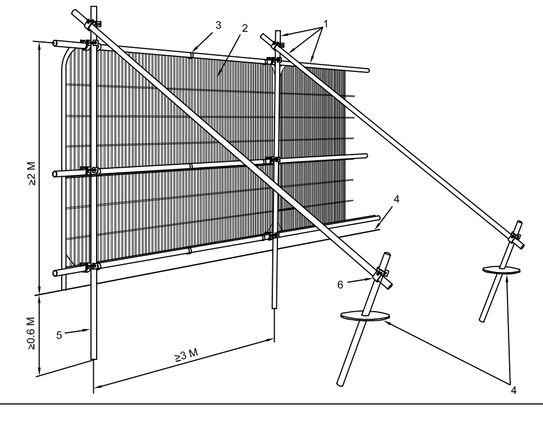



THIS DRAWING TO BE VIEWED IN COLOUR AND READ IN CONJUNCTION WITH ARBORICULTURAL IMPACT ASSESSMENT AND METHOD STATEMENT REPORT

KEY

- ROOT PROTECTION AREA
- CATEGORY A
- CATEGORY B
- CATEGORY C
- CATEGORY U
- TREE PROTECTION FENCING
- TREES TO BE REMOVED
- 'NON DIG' PAVEMENT
- REMOVAL OF EXISTING HARD SURFACES BY HAND AND REINSTATEMENT WITH SOIL

No dimension to be scaled from this drawing © Copyright reserved	Date	Rev

tba landscape architects

Landscape Architecture
Arboriculture

1st Floor, Building2
Wharf Business Centre
Lower Wharf Street
Ashton-under-Lyne
Lancs OL6 7PB

Tel: 0161-308 3765
E-mail: info@trevorbridge.co.uk

Project
SATAIDD HOUSE
BURNAGE LANE, MANCHESTER
WESTWOOD GROUP

Title
TREE PROTECTION PLAN

Date	Scale(s)	Dwg no	Rev
JULY 14	1:200 @ A1	4843.02	
Dwn: MG	Chkd: DG		