5.7 METRE MAIN STORE GANTRY

Plan View
scale 1:35

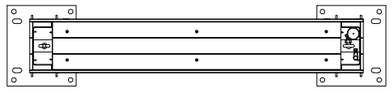

Front Elevation
scale 1:35

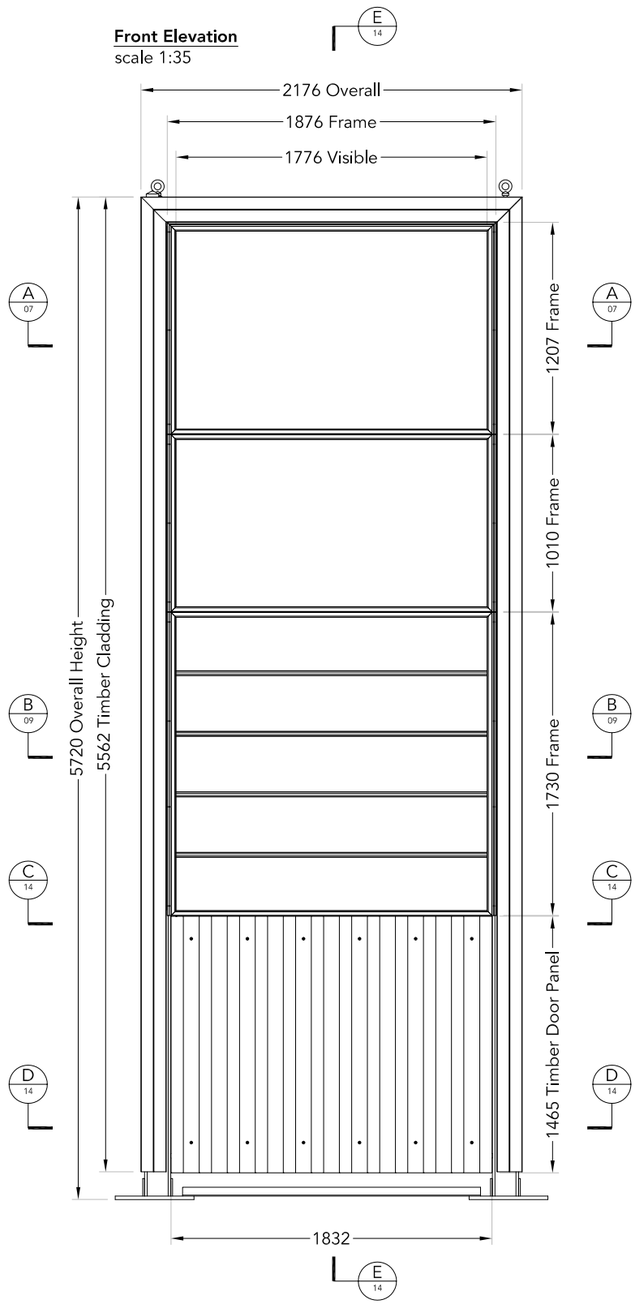

Side Elevation
scale 1:35

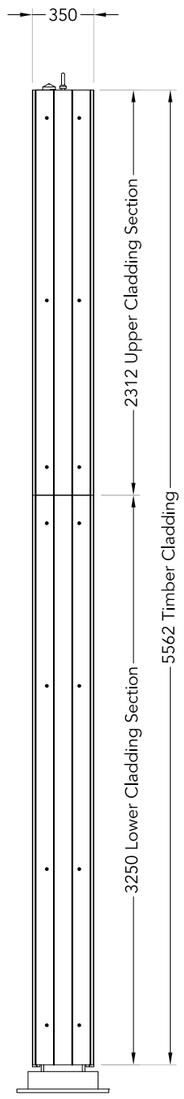

Rear Elevation
scale 1:35

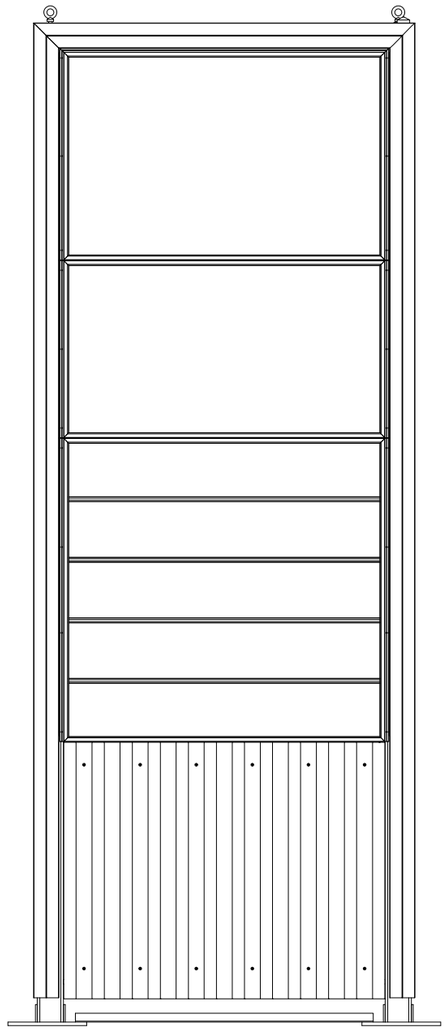

Isometric View
not to scale

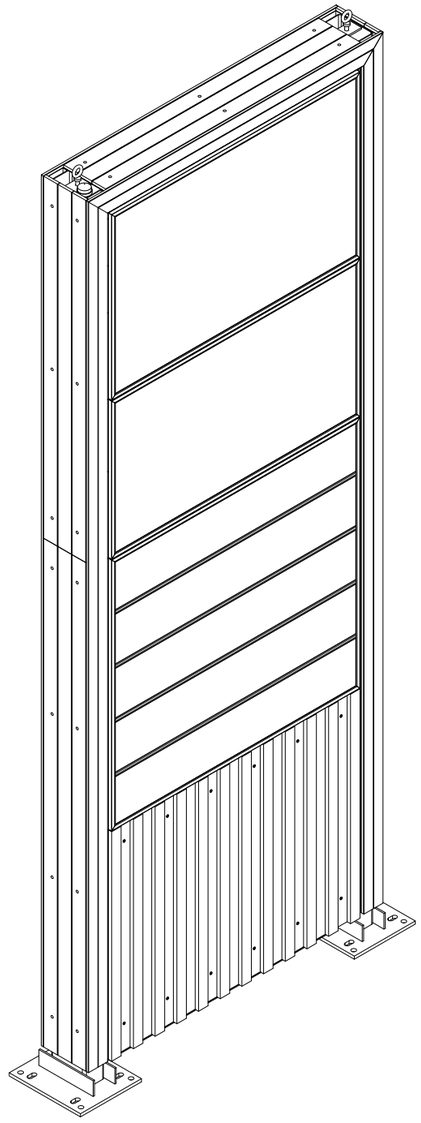

Colour Visual
not to scale



TESCO

© THIS DRAWING IS COPYRIGHT AND IS THE PROPERTY OF TESCO. ANY REPRODUCTION WITHOUT THE WRITTEN PERMISSION OF TESCO IS STRICTLY PROHIBITED

Project manager (Initials) GL	Client Tesco Stores Ltd	Item description 5.7 Metre Main Store Gantry Overview - GA
Designer (Initials) RA	Project 5.7 Metre Main Store Gantry	Scale - A3 1:35 / Rev 00
Date 25-11-14		Dwg no. EXT-064 / Sheet 01

5.7 METRE MAIN STORE GANTRY

Broken Front Elevation
scale 1:25

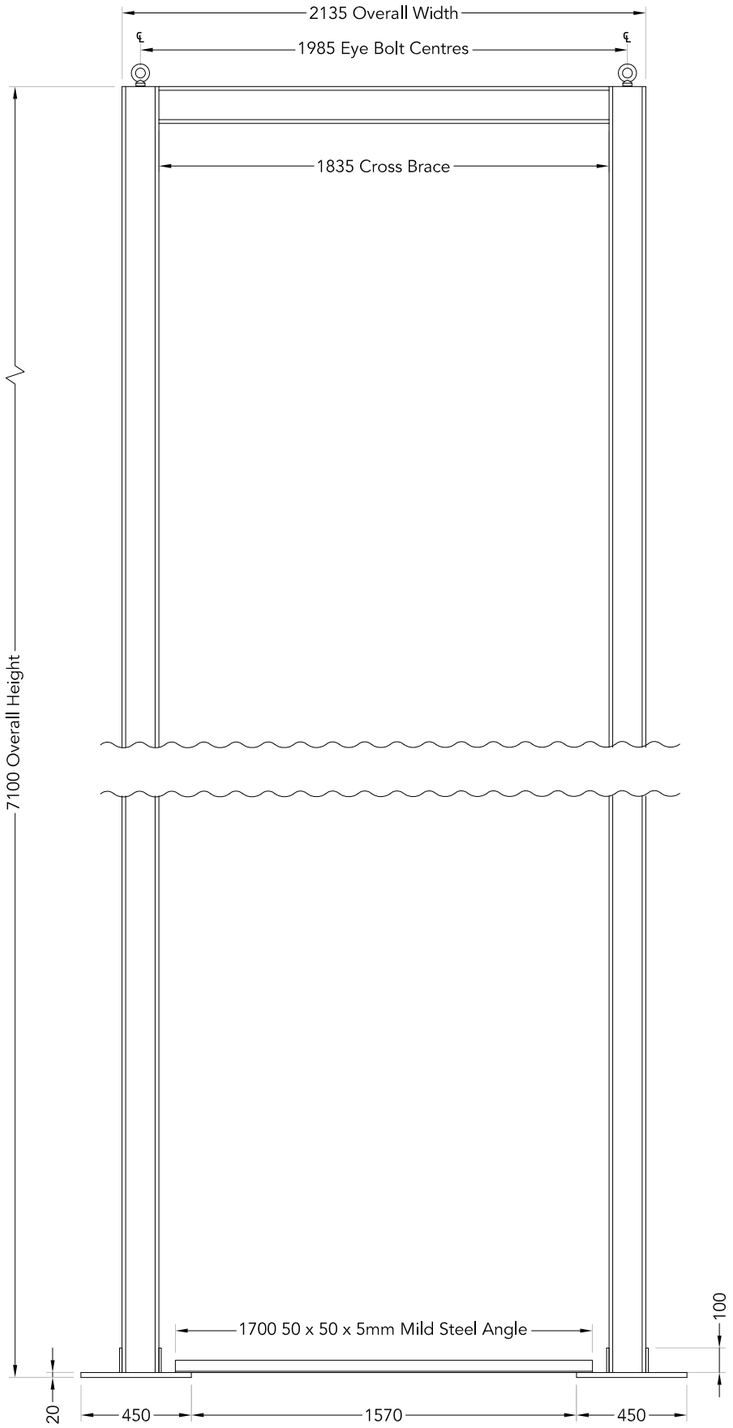

Broken Side Elevation
scale 1:25

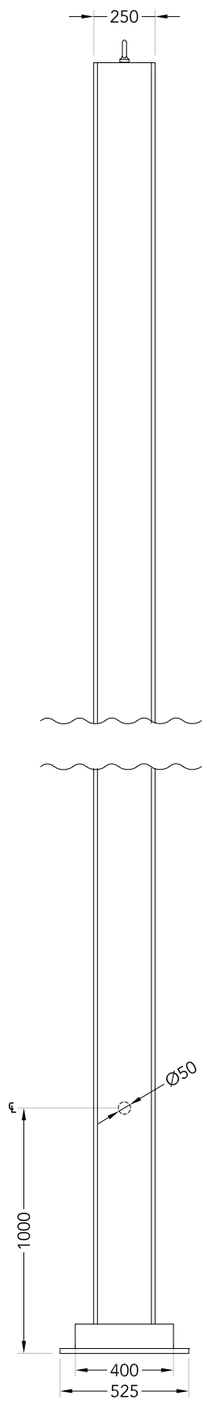

Plan View Of Frame
scale 1:15

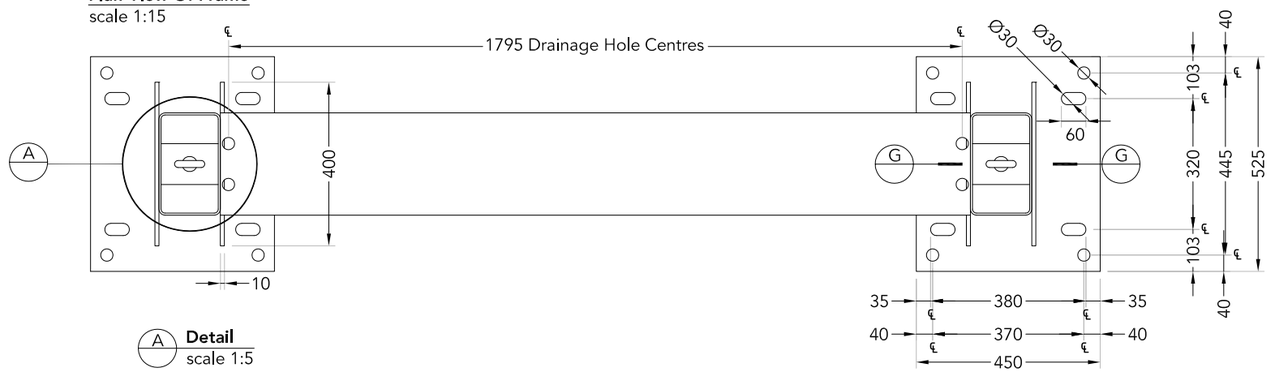

A **Detail**
scale 1:5

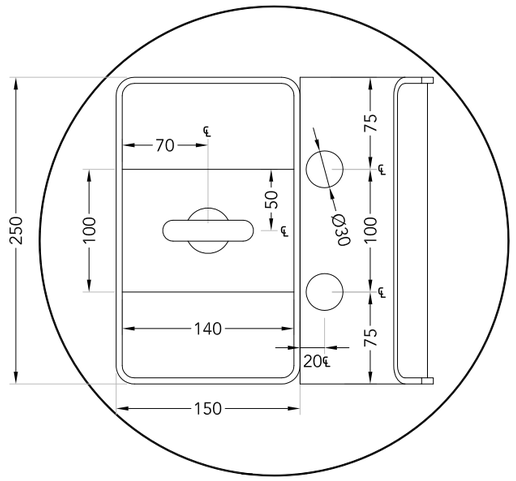

GG **Section**
scale 1:2

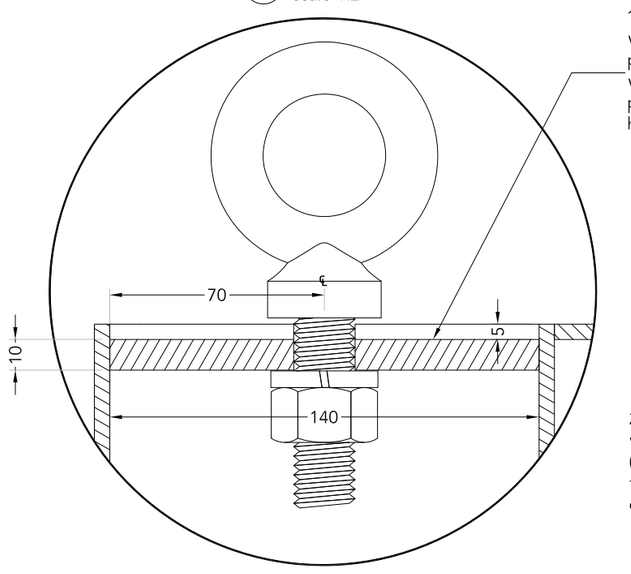

10mm thick mild steel plate welded to inside of main post (5mm continuous fillet weld). Plate to have central pre-drilled central fixing hole to accept M20 eyebolt

Isometric View Of Frame
not to scale

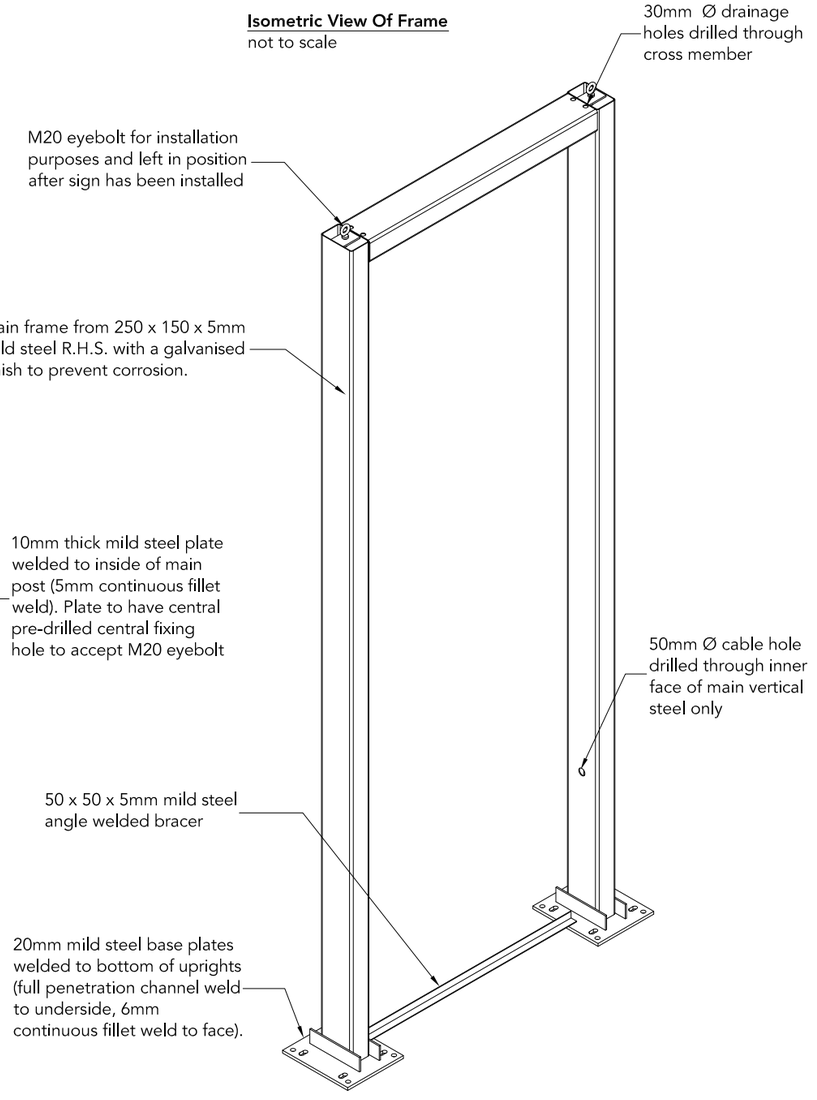

TESCO

© THIS DRAWING IS COPYRIGHT AND IS THE PROPERTY OF TESCO. ANY REPRODUCTION WITHOUT THE WRITTEN PERMISSION OF TESCO IS STRICTLY PROHIBITED

Project manager (Initials) GL	Client Tesco Stores Ltd	Item description 5.7 Metre Main Store Gantry Frame - Fabrication
Designer (Initials) RA	Project 5.7 Metre Main Store Gantry	Scale - A3 1:25, 1:15, 1:5 & 1:2
Date 25-11-14		Rev 00
		Dwg no. EXT-064
		Sheet 02

5.7 METRE MAIN STORE GANTRY

Typical Section Showing Cladding Fixings
scale 1:3

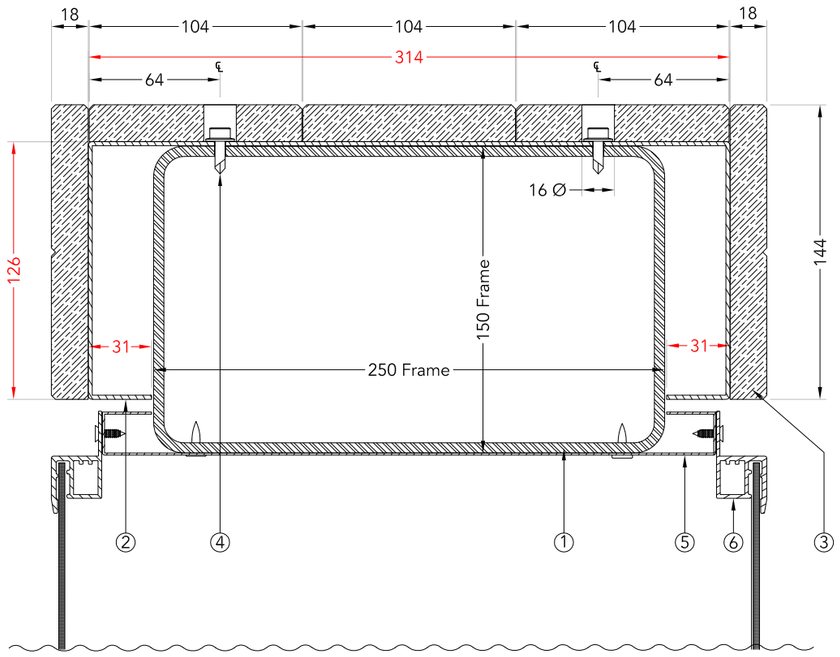

ROTATE SECTION BY 90° TO SHOW VERTICAL CLADDING DETAILS

Specification

① 250 x 150 x 5mm mild steel rectangular hollow section posts galvanised and then painted with white Galvacoat White RAL 9003 non-ferrous metal paint.

② Mounting bracket from folded 2mm aluminium to be left natural finish.
NOTE: All dimensions indicated in red are crucial and to be adhered to during manufacture.

③ Timber cladding from lengths of 18mm thick Siberian larch with dimensions to match profiles detailed below. Cladding is fixed to the mounting plates from the rear using M8 x 12mm countersunk stainless steel woodscrews. Timber is to be left in a natural finish. Ends of the front and rear cladding sections to have a 45° mitre to each end to allow tight fit to vertical cladding sections. The cladding assemblies are fixed through the side and top faces into the main framework using M5 x 16mm self drilling Tek screws. The side and top timbers are to have 16mm Ø full depth rebated holes to the outer two timbers only (see Plan View) to allow passage of an M5 self drilling tek screw socket

④ 1mm Zintec liner panel fixed to the main steel using SC9 15mm colleted steel pins (sourced from Spit, code 011340-SC9-15-C inserted into Red Hi-strength clip code 011658) inserted using Hilti compressed air gun.

⑤ Extruded aluminium frame assembly (see following pages for full details).

ON NO COUNT ARE THERE TO BE FIXINGS THROUGH THE FRONT OR REAR TIMBERS

Horizontal Cladding Front/Rear Elevation
scale 1:10

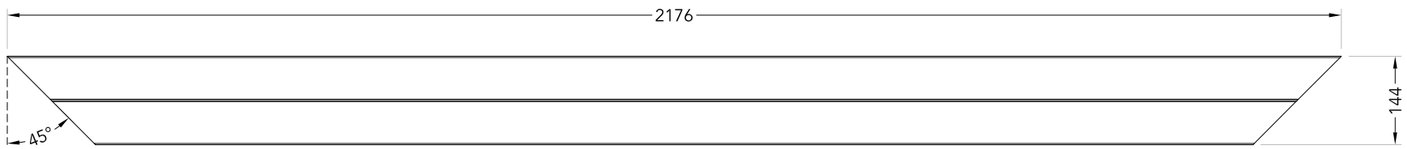

Horizontal Cladding Plan View
scale 1:10

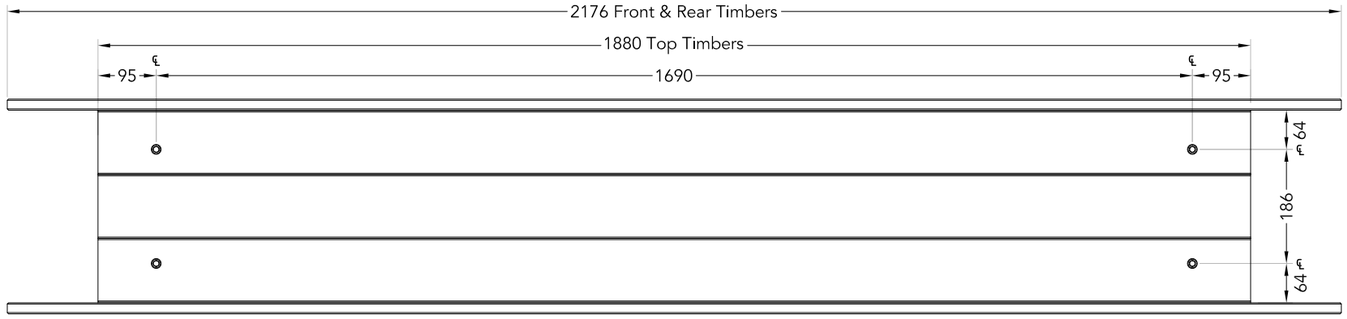

Horizontal Cladding Plan View From Below
scale 1:10

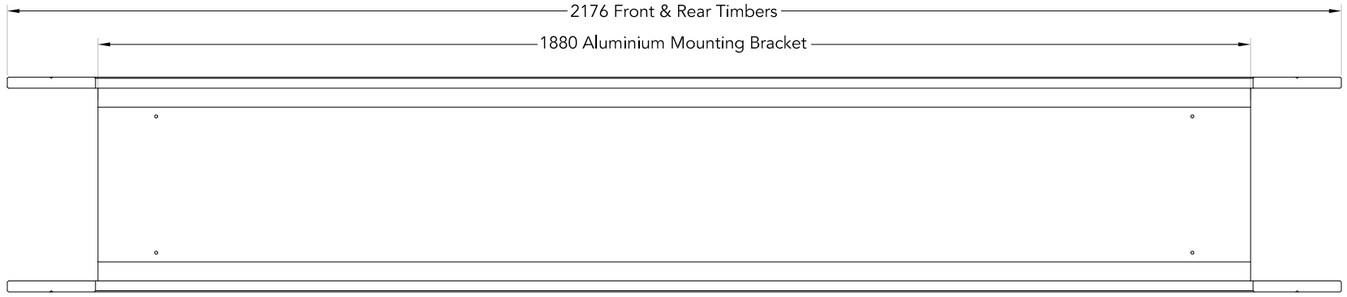

Side & Top Cladding Profile
scale 1:1

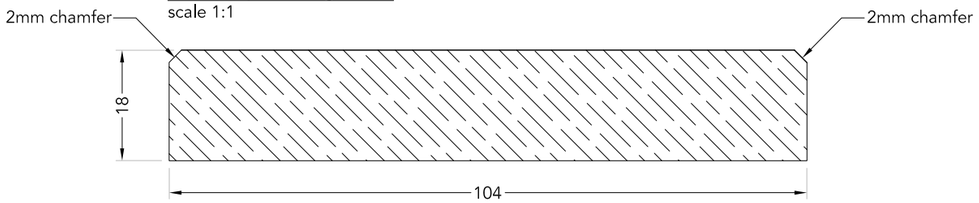

Front & Rear Cladding Profile
scale 1:1

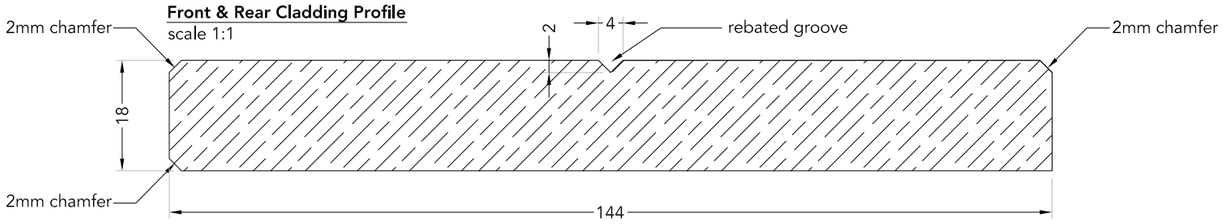

TESCO

© THIS DRAWING IS COPYRIGHT AND IS THE PROPERTY OF TESCO. ANY REPRODUCTION WITHOUT THE WRITTEN PERMISSION OF TESCO IS STRICTLY PROHIBITED

Project manager (Initials): GL	Client: Tesco Stores Ltd	Item description: 5.7 Metre Main Store Gantry Horizontal Cladding - FAB
Designer (Initials): RA	Project: 5.7 Metre Main Store Gantry	Scale - A3: 1:10, 1,3 & 1:1 / Rev: 00
Date: 25-11-14		Dwg no.: EXT-064 / Sheet: 03

5.7 METRE MAIN STORE GANTRY

Side Cladding Upper Section

Plan View
scale 1:15

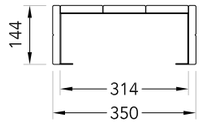

Side Elevation
scale 1:15

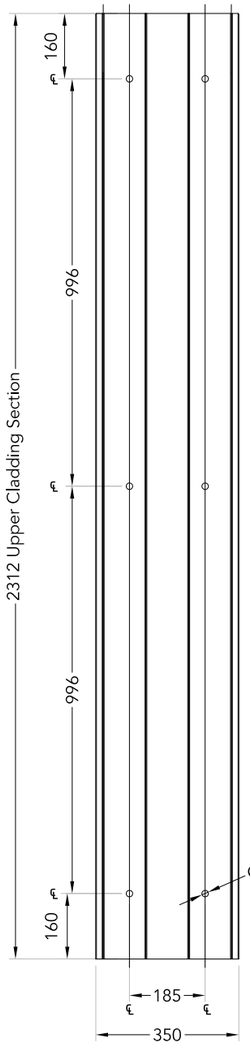

Front/Rear Elevation
scale 1:15

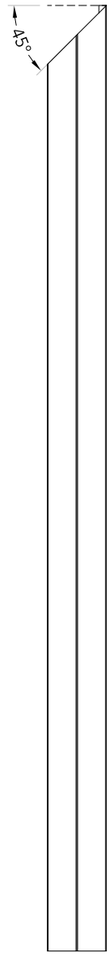

Side Elevation Rear View
scale 1:15

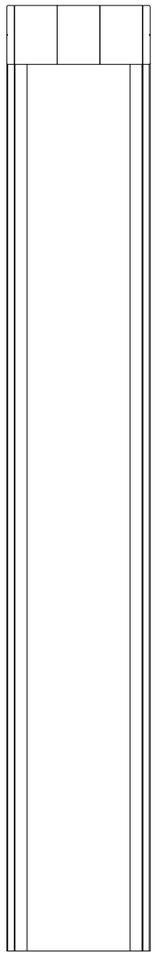

Isometric View
scale 1:15

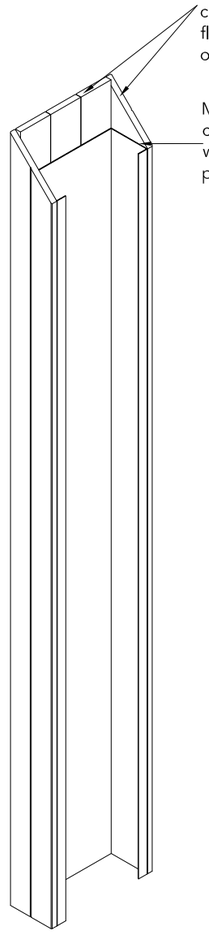

Only the front and rear cladding is to be mitred the side cladding is cut flush with the top of the mitrre

Mounting bracket cut short in line with the lowest point of the mitre

Side Cladding Lower Section

Plan View
scale 1:20

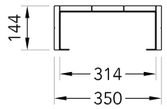

Side Elevation
scale 1:20

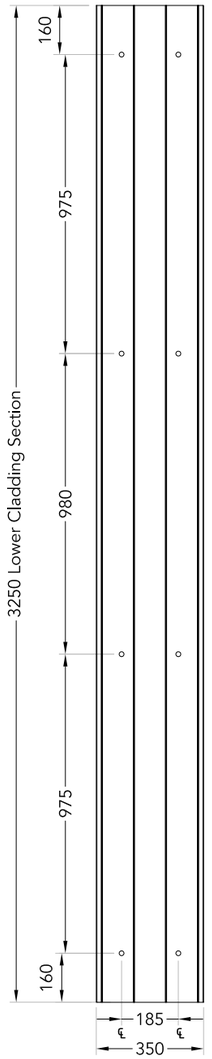

Front/Rear Elevation
scale 1:20

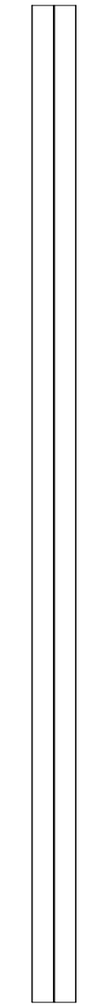

Side Elevation Rear View
scale 1:20

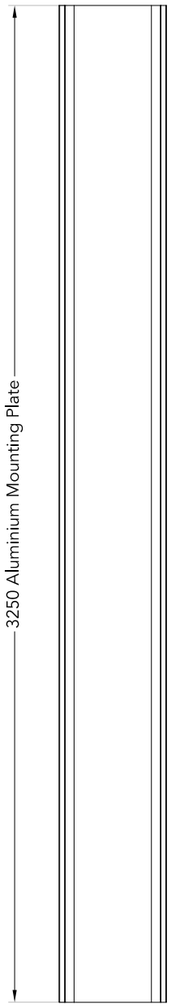

Isometric View
scale 1:20

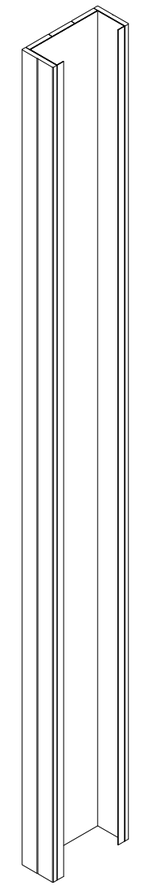

TESCO

© THIS DRAWING IS COPYRIGHT AND IS THE PROPERTY OF TESCO. ANY REPRODUCTION WITHOUT THE WRITTEN PERMISSION OF TESCO IS STRICTLY PROHIBITED

Project manager (Initials) GL	Client Tesco Stores Ltd	Item description 5.7 Metre Main Store Gantry Side Cladding - FAB
Designer (Initials) RA	Project 5.7 Metre Main Store Gantry	Scale - A3 1:15 & 1:20
Date 25-11-14		Rev 00
		Dwg no. EXT-064
		Sheet 04

5.7 METRE MAIN STORE GANTRY

Aluminium Mounting Bracket Profile
scale 1:2

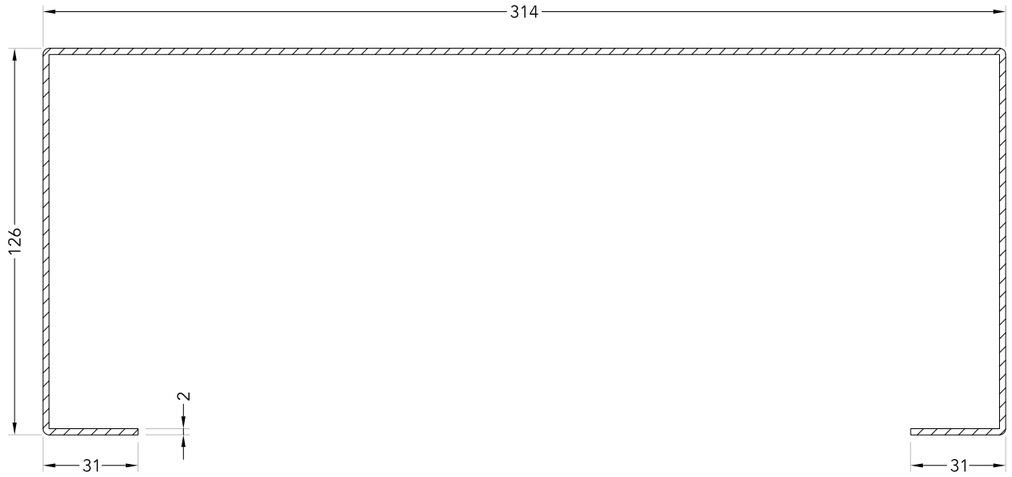

Specification

Mounting bracket from 2mm aluminium folded to the profile indicated above and then cut to the required length. The mounting brackets are to be left natural finish.

NOTE: All dimensions indicated are crucial and to be adhered to during manufacture.

Isometric Cutaway Showing Horizontal Cladding Details
not to scale

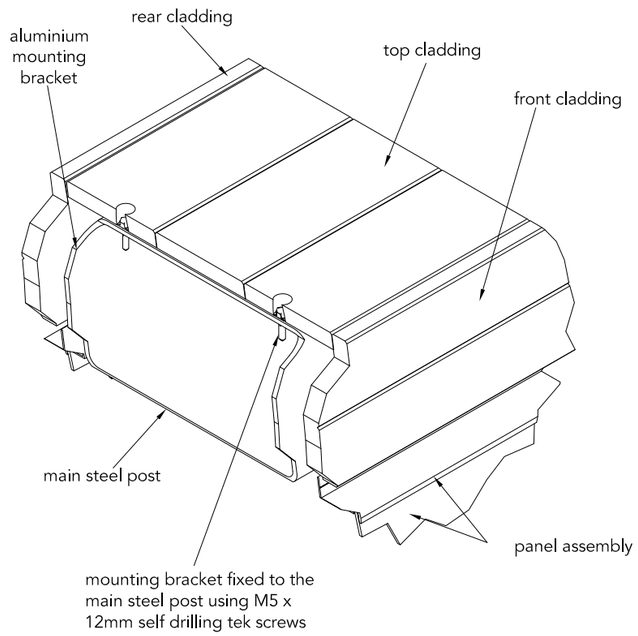

Isometric Cutaway Showing Vertical Cladding Details
not to scale

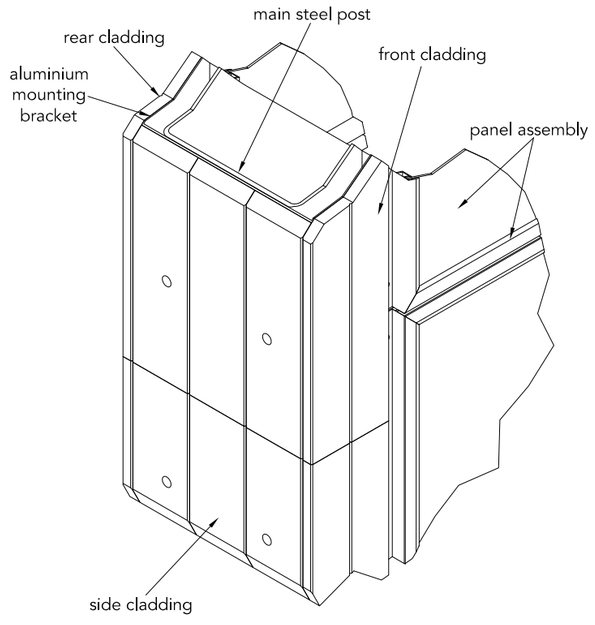

© THIS DRAWING IS COPYRIGHT AND IS THE PROPERTY OF TESCO. ANY REPRODUCTION WITHOUT THE WRITTEN PERMISSION OF TESCO IS STRICTLY PROHIBITED

Project manager (Initials) GL	Client Tesco Stores Ltd	Item description 5.7 Metre Main Store Gantry Side Cladding 2 - FAB
Designer (Initials) RA	Project 5.7 Metre Main Store Gantry	Scale - A3 1:2 / Rev 00
Date 25-11-14		Dwg no. EXT-064 / Sheet 05

5.7 METRE MAIN STORE GANTRY

Exploded Isometric View Showing Panel Construction
not to scale

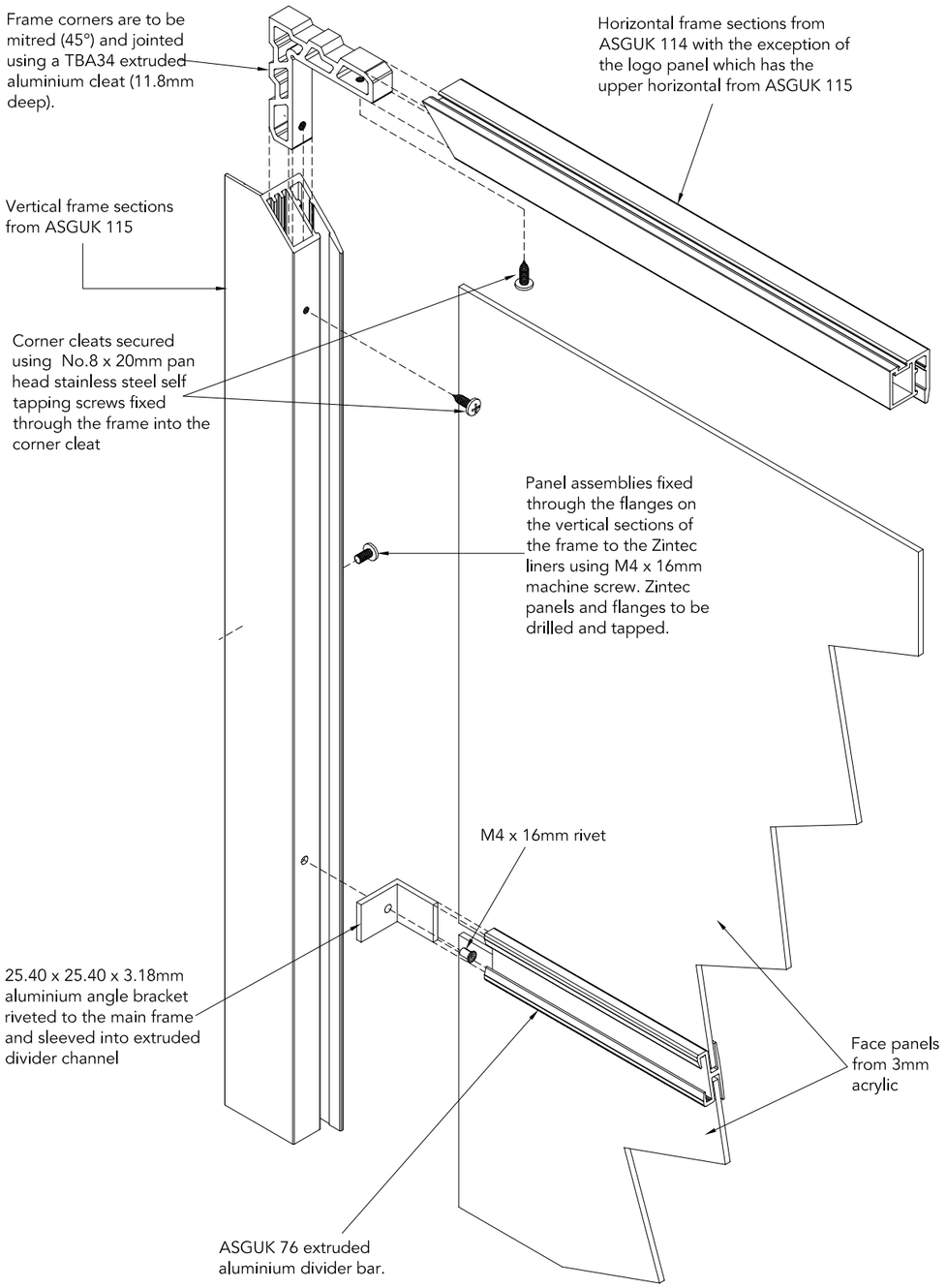

Isometric View Showing Panel Construction
not to scale

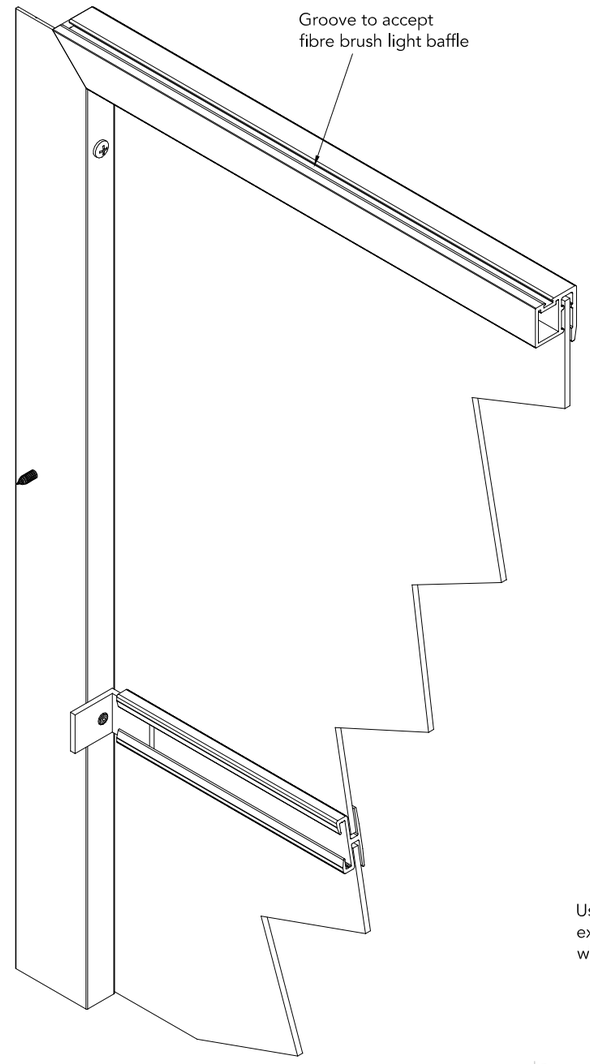

Isometric View Showing Panel Construction
scale 1:1

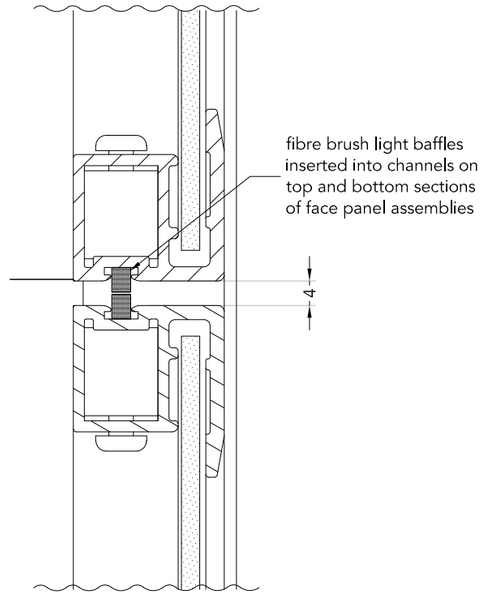

ASGUK 114 Profile
scale 1:1

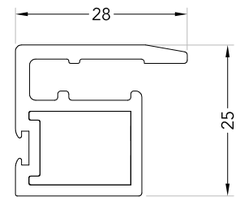

Used for all horizontal face panel sections except the top section of the logo panel which uses ASGUK 115

ASGUK 76 Profile
scale 1:1

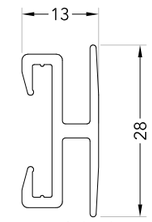

Used as a panel divider on the PFS and offers panel assemblies

ASGUK 114 Profile
scale 1:1

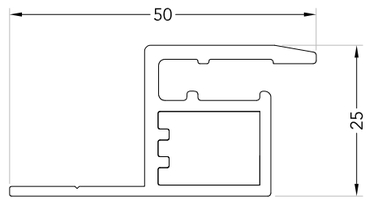

Used for all vertical face panel sections and the top section of the logo panel which uses ASGUK 115

TESCO

Project manager (Initials) GL	Client Tesco Stores Ltd	Item description 5.7 Metre Main Store Gantry Panels - Standard Fab	
Designer (Initials) RA	Project 5.7 Metre Main Store Gantry	Scale - A3 1:1	Rev 00
Date 25-11-14		Dwg no. EXT-064	Sheet 06

© THIS DRAWING IS COPYRIGHT AND IS THE PROPERTY OF TESCO. ANY REPRODUCTION WITHOUT THE WRITTEN PERMISSION OF TESCO IS STRICTLY PROHIBITED

5.7 METRE MAIN STORE GANTRY

FF **Section**
scale 1:12



Front Elevation
scale 1:12

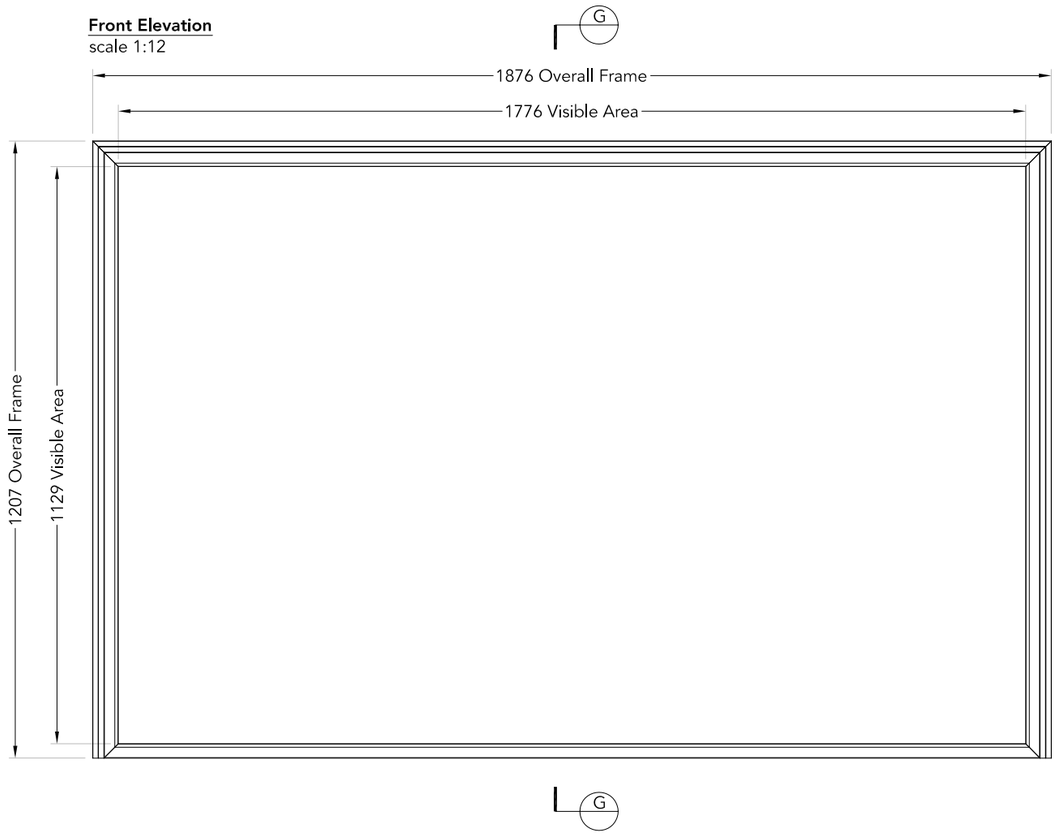

GG **Section**
scale 1:12

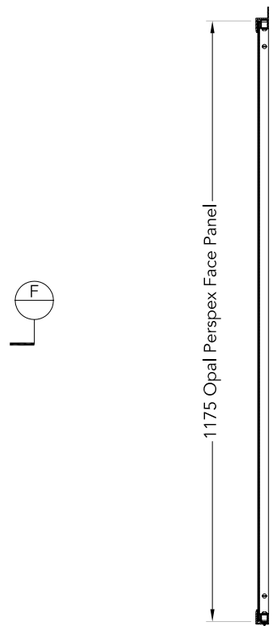

AA 01 **Section**
scale 1:7

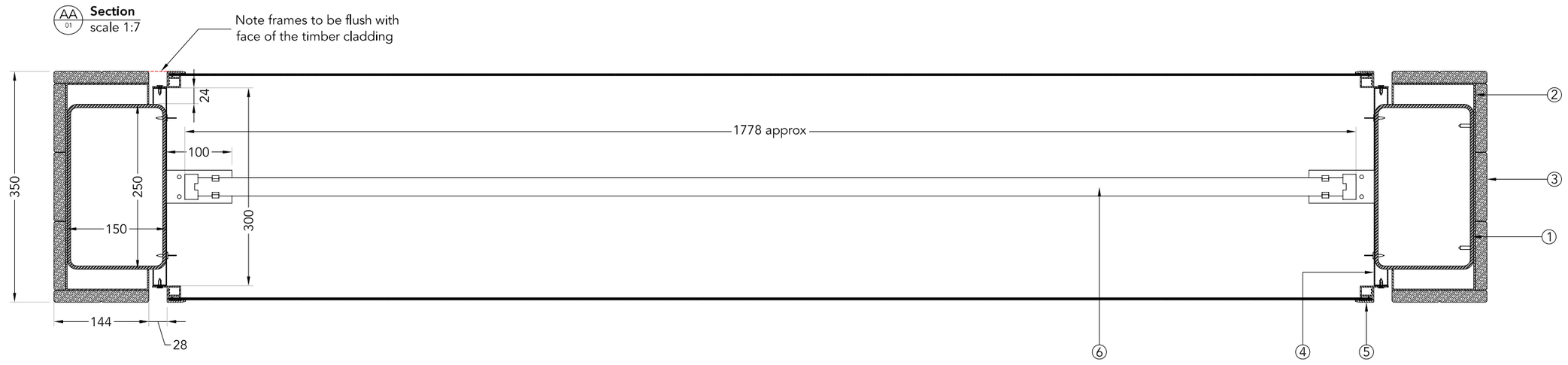

Specification

① 250 x 150 x 5mm mild steel rectangular hollow section posts galvanised and then painted with white Galvacoat White RAL 9003 non-ferrous metal paint.

② Mounting bracket from folded 2mm aluminium to be left natural finish.

③ Timber cladding from lengths of 18mm thick Siberian larch. Cladding is fixed to the mounting plates from the rear using M8 x 12mm countersunk stainless steel woodscrews.

④ 1mm Zintec liner panel fixed to the main steel using SC9 15mm colleted steel pins.
THIS PANEL ASSEMBLY IS TO BE MOUNTED TO PANEL LINER A.
SEE DRAWING EXT-067A FOR FULL DETAILS.

⑤ Extruded aluminium frame assembly, the two vertical sections and the top horizontal section from ASGUK 115 extruded aluminium section, the bottom horizontal section from ASGUK 114 extruded aluminium section. The frame is to have mitred corners (45°) joined using TBA34 extruded aluminium cleats inserted into the frame sections and mechanically fixed using No.8 x 20mm pan head stainless steel self tapping screws. Frames are to be powder coated/stove enameled light blue to match PMS 299C 30-40% matt finish. The vertical sections of the frame are then to have Oracal 551-101 Arctic white self adhesive vinyl applied. The frames are then fixed to the Zintec liners using M4 x 16mm stainless steel pan head machine screws. The frame flanges and the Zintec liners are to be drilled and tapped in advance. Screws are to be painted to match the frame. Face panel from 3mm Opal 050 Perspex retained by the extruded frame. Details are to be applied to the face of the panel using self adhesive vinyls to the following references:-

Tesco Logo and the Extra Blip:- 3M 2330-46 Red or Oracal 8500-031 Red.

Extra, Sub-text and Tesco Blips:- 3M 2330-87 Blue or Oracal 8500-065 Cobalt Blue.

⑥ The logo panel is illuminated by 2 6 foot Master TLD super 80 70 watt 840 colour fluorescent tubes,fixed to fold out tongues on the Zintec liner plates using steel tube clips and 4mm diameter pop rivets. Ballast units to be fixed to the panel mounting plates. (1 double code 270HF ballast unit required).

TESCO

Project manager (Initials) GL	Client Tesco Stores Ltd	Item description 5.7 Metre Main Store Gantry Logo Panel - Fab	
Designer (Initials) RA	Project 5.7 Metre Main Store Gantry	Scale - A3 1:12 & 1:7	Rev 00
Date 25-11-14		Dwg no. EXT-064	Sheet 07

© THIS DRAWING IS COPYRIGHT AND IS THE PROPERTY OF TESCO. ANY REPRODUCTION WITHOUT THE WRITTEN PERMISSION OF TESCO IS STRICTLY PROHIBITED

5.7 METRE MAIN STORE GANTRY

HH **Section**
scale 1:12



Front Elevation
scale 1:12

I

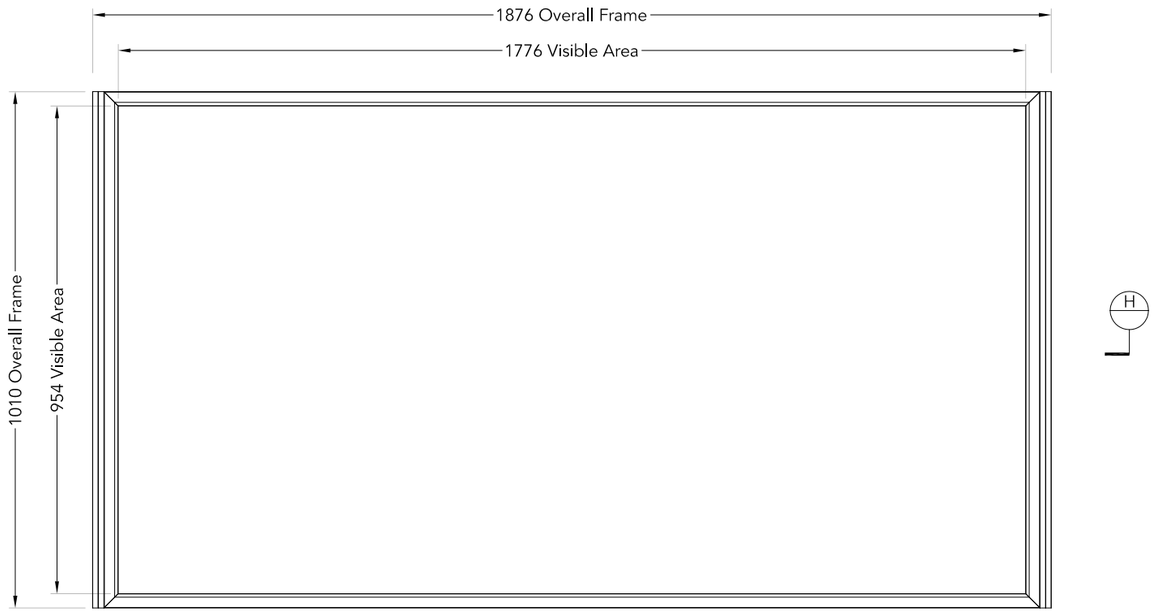

II **Section**
scale 1:12

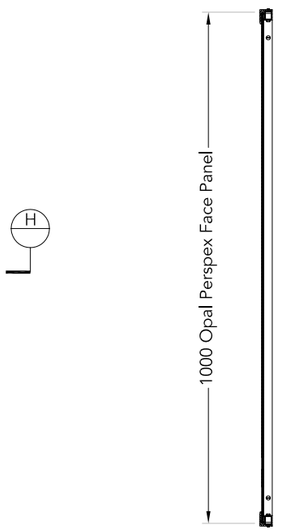

I

AA 01 **Section**
scale 1:7

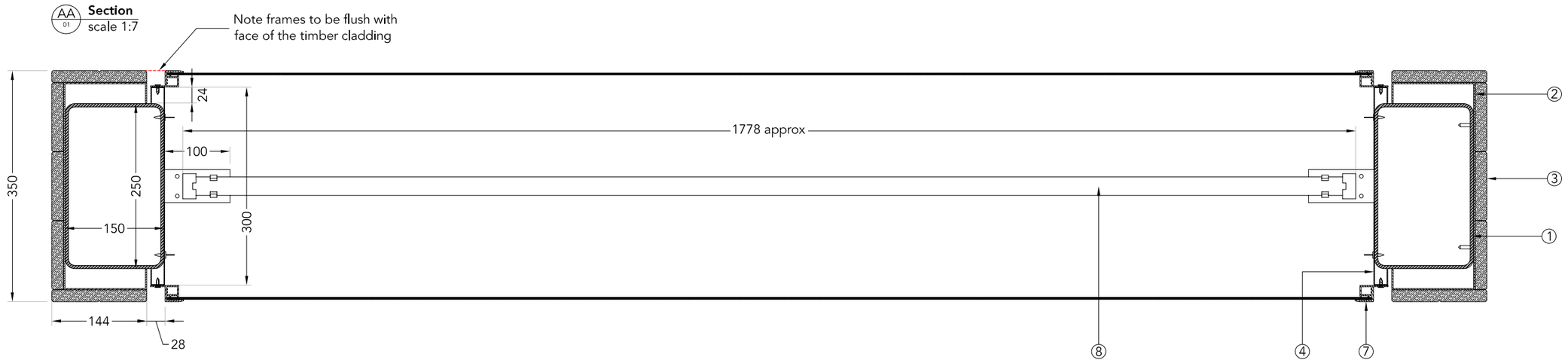

Specification

① 250 x 150 x 5mm mild steel rectangular hollow section posts galvanised and then painted with white Galvacoat White RAL 9003 non-ferrous metal paint.

② Mounting bracket from folded 2mm aluminium to be left natural finish.

③ Timber cladding from lengths of 18mm thick Siberian larch with dimensions to match profiles detailed below. Cladding is fixed to the mounting plates from the rear using M8 x 12mm countersunk stainless steel woodscrews.

④ 1mm Zintec liner panel fixed to the main steel using SC9 15mm colleted steel pins (sourced from Spit, code 011340-SC9-15-C inserted into Red Hi-strength clip code 011658) inserted using Hilti compressed air gun.
THIS PANEL ASSEMBLY IS TO BE MOUNTED TO PANEL LINER B.
SEE DRAWING EXT-067B FOR FULL DETAILS.

⑦ Extruded aluminium frame assembly, the two vertical sections from ASGUK 115 extruded aluminium section, the two horizontal sections from ASGUK 114 extruded aluminium section. The frame is to have mitred corners (45°) joined using TBA34 extruded aluminium cleats inserted into the frame sections and mechanically fixed using No.8 x 20mm pan head stainless steel self tapping screws. Frames are to be powder coated/stove enameled light blue to match PMS 299C 30-40% matt finish. The vertical sections of the frame are then to have Oracal 551-550 Dark Blue to match PMS 2955C self adhesive vinyl applied. The frames are then fixed to the Zintec liners using M4 x 16mm stainless steel pan head machine screws. The frame flanges and the Zintec liners are to be drilled and tapped in advance. Screws are to be painted to match the frame. Face panel from 3mm Opal 050 Perspex retained by the extruded frame. The face of the panel is to have Oracal 551-550 Dark Blue to match PMS 2955C self adhesive vinyl applied with text weeded out to expose the Perspex below.

⑧ The opening hours panel is illuminated by 2 6 foot Master TLD super 80 70 watt 840 colour fluorescent tubes,fixed to fold out tongues on the Zintec liner plates using steel tube clips and 4mm diameter pop rivets. Ballast units to be fixed to the panel mounting plates. (1 double code 270HF ballast unit required).

TESCO

Project manager (Initials) GL	Client Tesco Stores Ltd	Item description 5.7 Metre Main Store Gantry Opening Hours Panel - Fab.	
Designer (Initials) RA	Project 5.7 Metre Main Store Gantry	Scale - A3 1:12 & 1:7	Rev 00
Date 25-11-14		Dwg no. EXT-064	Sheet 08

© THIS DRAWING IS COPYRIGHT AND IS THE PROPERTY OF TESCO. ANY REPRODUCTION WITHOUT THE WRITTEN PERMISSION OF TESCO IS STRICTLY PROHIBITED

5.7 METRE MAIN STORE GANTRY

Front Elevation
scale 1:12

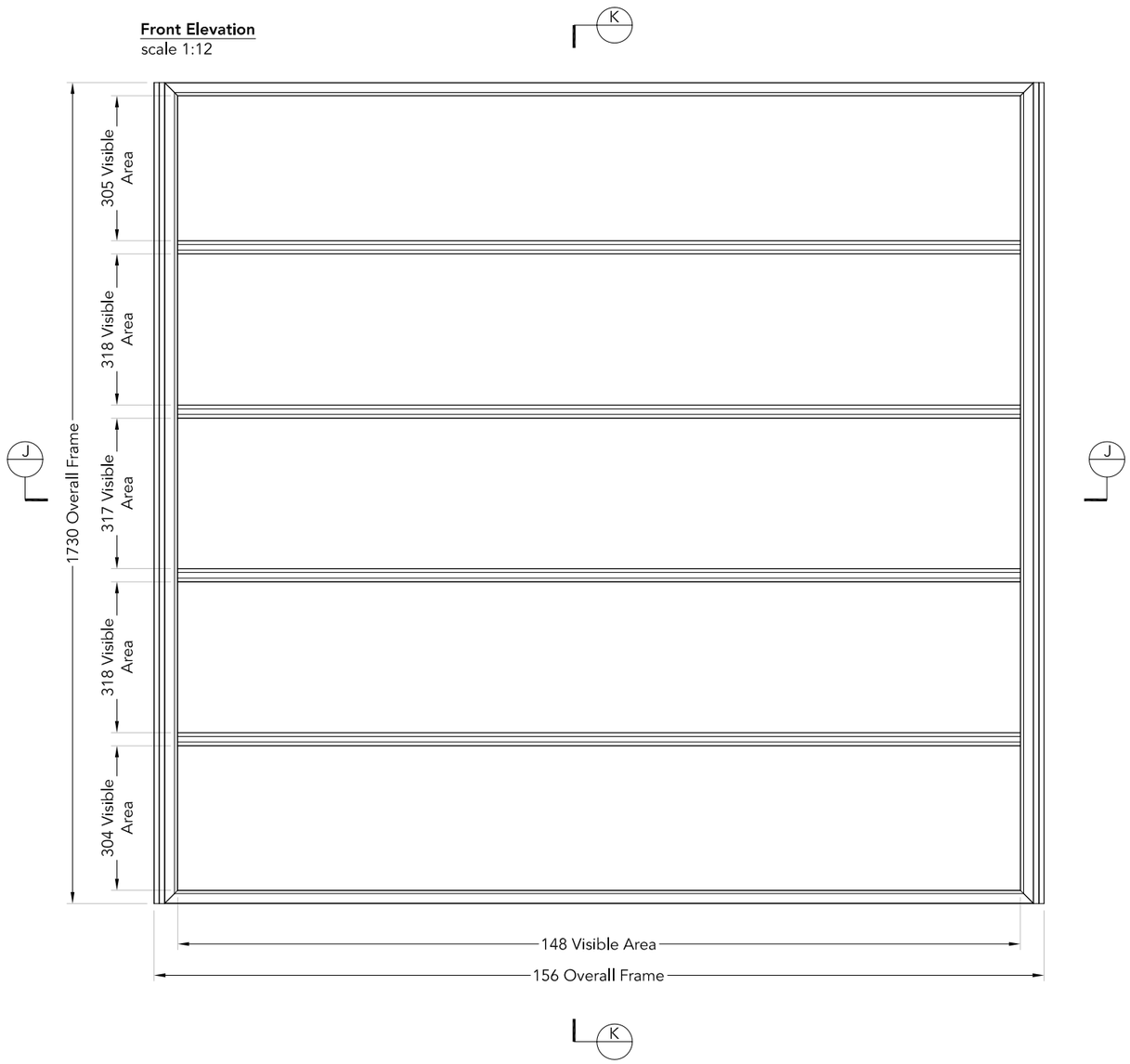

JJ Section
scale 1:12

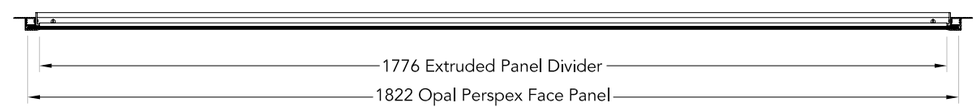

KK Section
scale 1:12



Specification

① 250 x 150 x 5mm mild steel rectangular hollow section posts galvanised and then painted with white Galvacoat White RAL 9003 non-ferrous metal paint.

② Mounting bracket from folded 2mm aluminium to be left natural finish.

③ Timber cladding from lengths of 18mm thick Siberian larch. Cladding is fixed to the mounting plates from the rear using M8 x 12mm countersunk stainless steel woodscrews.

④ 1mm Zintec liner panel fixed to the main steel using SC9 15mm colleted steel pins.
THIS PANEL ASSEMBLY IS TO BE MOUNTED TO PANEL LINER D.
SEE DRAWING EXT-067D FOR FULL DETAILS.

⑨ Extruded aluminium frame assembly, the two vertical sections from ASGUK 115 extruded aluminium section, the two horizontal sections from ASGUK 114 extruded aluminium section. The frame is to have mitred corners (45°) joined using TBA34 extruded aluminium cleats inserted into the frame sections and mechanically fixed using No.8 x 20mm pan head stainless steel self tapping screws. Frames are to be powder coated/stove enameled light blue to match PMS 299C 30-40% matt finish. The vertical sections of the frame are then to have Oracal 551-550 Dark Blue to match PMS 2955C self adhesive vinyl applied. The frames are then fixed to the Zintec liners using M4 x 16mm stainless steel pan head machine screws. The frame flanges and the Zintec liners are to be drilled and tapped in advance. Screws are to be painted to match the frame. Face panel from 3mm Opal 050 Perspex retained by the extruded frame. The face of the panel is to have Oracal 551-550 Dark Blue to match PMS 2955C self adhesive vinyl applied with text weeded out to expose the Perspex below.

⑩ The hierarchy panel is illuminated by 5 6 foot Master TLD super 80 70 watt 840 colour fluorescent tubes,fixed to fold out tongues on the Zintec liner plates using steel tube clips and 4mm diameter pop rivets. Ballast units to be fixed to the panel mounting plates. (2 double code 270HF ballast units and 1 single code 170HF ballast unit required).

2 FRAMES REQUIRED PER SIDE:- 4 IN TOTAL

CC 01 Broken Section
scale 1:7

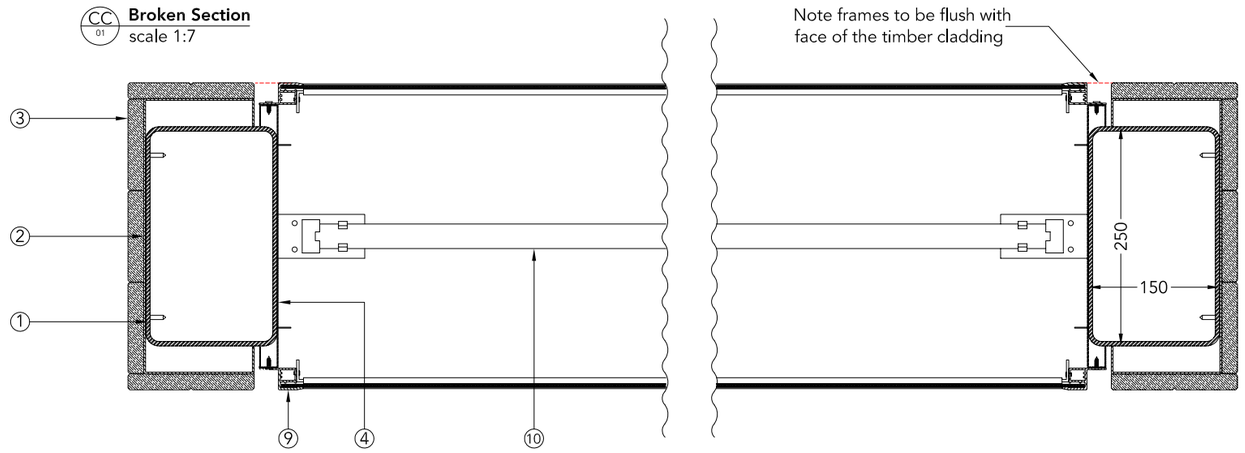

TESCO

Project manager (Initials) GL	Client Tesco Stores Ltd	Item description 5.7 Metre Main Store Gantry Hierarchy Panel - Fab	
Designer (Initials) RA	Project 5.7 Metre Main Store Gantry	Scale - A3 1:12 & 1:7	Rev 00
Date 25-11-14		Dwg no. EXT-064	Sheet 09

© THIS DRAWING IS COPYRIGHT AND IS THE PROPERTY OF TESCO. ANY REPRODUCTION WITHOUT THE WRITTEN PERMISSION OF TESCO IS STRICTLY PROHIBITED