

Fläkt Woods Limited

Technical Data Sheet

MaXfan2

Quotation Number	:	Fan Code	: 50-1 MaXfan2/16/4/5/42/36
Project Name	:	Customer	:
Item Reference:	:	Date:	: Monday, April 27, 2015

Fan Code	50-1 MaXfan2/16/4/5/42/36
Fan Diameter / Size	500 Size / mm
Blades	5
Fan Speed	1380 rpm
Velocity	14.9 m/s
Blade Angle	42-36
Installation Type / Form of Running	D / AB
Fan Casing	Long
Requested Duty	2.93m³/s @ 254 Pa (static)
Outlet Dynamic Pressure	132 Pa
Duty Shaft Power	1.61 kW
Max Shaft Power	0.970 kW
Total Efficiency	69.7 %
Motor Frame	CT9
Motor Rating	1.94 kW [IE1]
Full Load Current	13.8 A
Starting Current	27 A
Motor Mounting	Pad
Electrical Supply	220-240 Volts 50 Hz 1 Phase
Start Type	DOL
Motor Winding	Standard
Enclosure	Standard All
ErP [FMEG] Rating	N 58 (ErP Compliant 2015)
ErP [FMEG] Target	N 58
FMEG Blade Angle [Range]	42° [42° - 42°]
Measurement Category	D (Total)
VSD	N
Fan + Motor Efficiency	54.2% (2.55 m³/s @ 467 Pa)
Motor Input Power (ErP)	2.20 kW
SFP value	0.67 W/(l/s) @ Requested Duty
Power from mains	1.94 kW
Energy Consumption	3880 kWh (2000 h/year)
Running Cost / Year	£582
Air Density	1.2 kg/m³ / 20 °C / 0 m / 50% RH
Smoke Venting	Non Smoke Venting
Product Number	EQ511467

Performance data has been derived from tests carried out in a Flakt Woods laboratory, in accordance with ISO 5801 and is specifically applicable for Ducted installations. When an electronic controller is incorporated, enhanced motor noise can occur - particularly when the operating speed is well below maximum. FWL therefore recommend using an auto transformer speed controller for noise sensitive applications. Bifurcateds are Erp exempt when used continuously at >100C. They are not for use in the EEA at lower temperatures.

Acoustic data has been derived from tests carried out in a Flakt Woods laboratory, in accordance with BS 848 Pt 2, 1985 / BS EN ISO 5136 under Ducted conditions. The single figure provided is the overall Inlet sound pressure level at the specified distance, under spherical, free field conditions.

Acoustic figures for adjusted running speeds have been interpolated and are for reference only.

Terms and Conditions:This offer is made subject to the terms and conditions detailed on the accompanying letter.

	Sound Spectrum (Hz)								Overall	
	63	125	250	500	1k	2k	4k	8k	Lw*	LpA @ 3 m**
Inlet*	92	95	99	94	89	84	75	68	102	75

* Lw dB re 10^{-12} W ** dBA re $2x10^{-5}$ Pa

Sound data at requested duty.

Description	Qty	Nett Unit Price	Price
Fan			
EQ511467 - 50-1 MaXfan2/16/4/5/42/36	1	enquire	enquire
Accessories			
Thermostat	1	enquire	enquire
TOTAL PRICE (Fan / Accessories / Controls)			**enquire**

Website:

, ,

Email: Ayla.Vinter@flaktwoods.com

Tel: Fax:

Copyright Fläkt Woods Group 2003 - 2015

Quotation Number	:	Fan Code	: 50-1 MaXfan2/16/4/5/42/36
Project Name	:	Customer	:
Item Reference:	:	Date:	: Monday, April 27, 2015

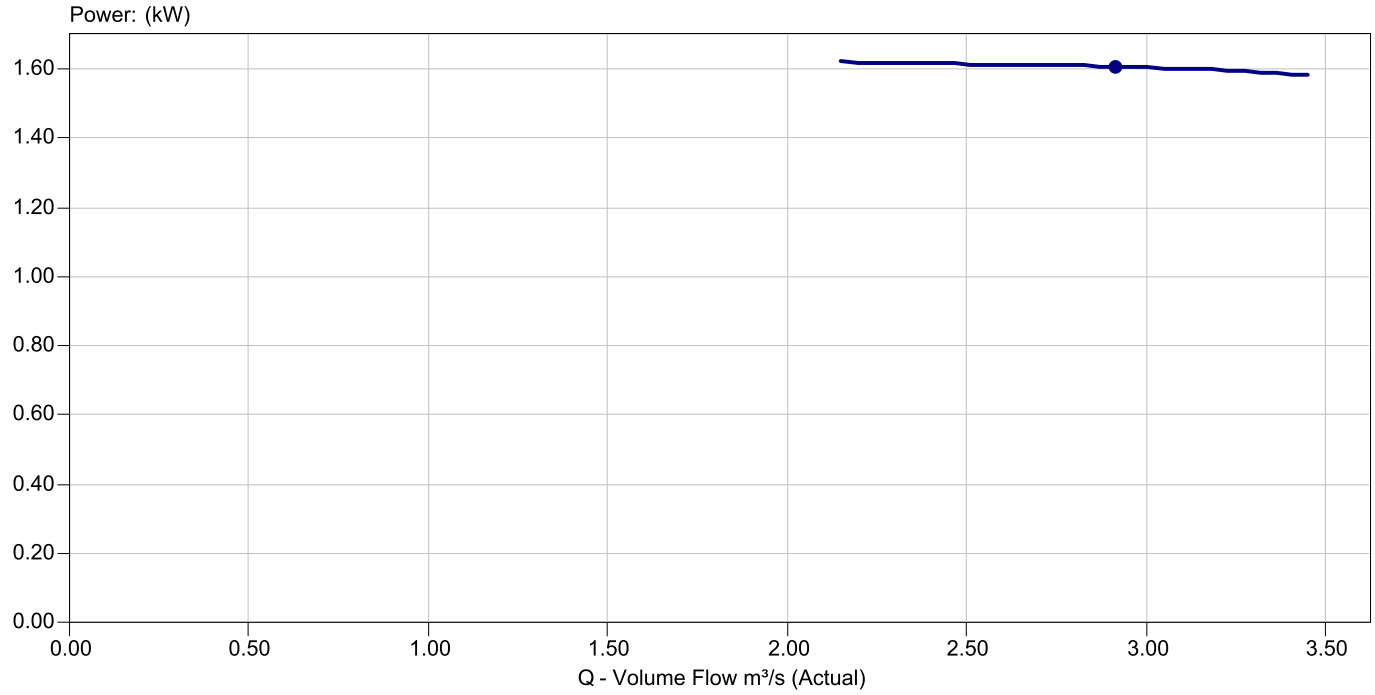

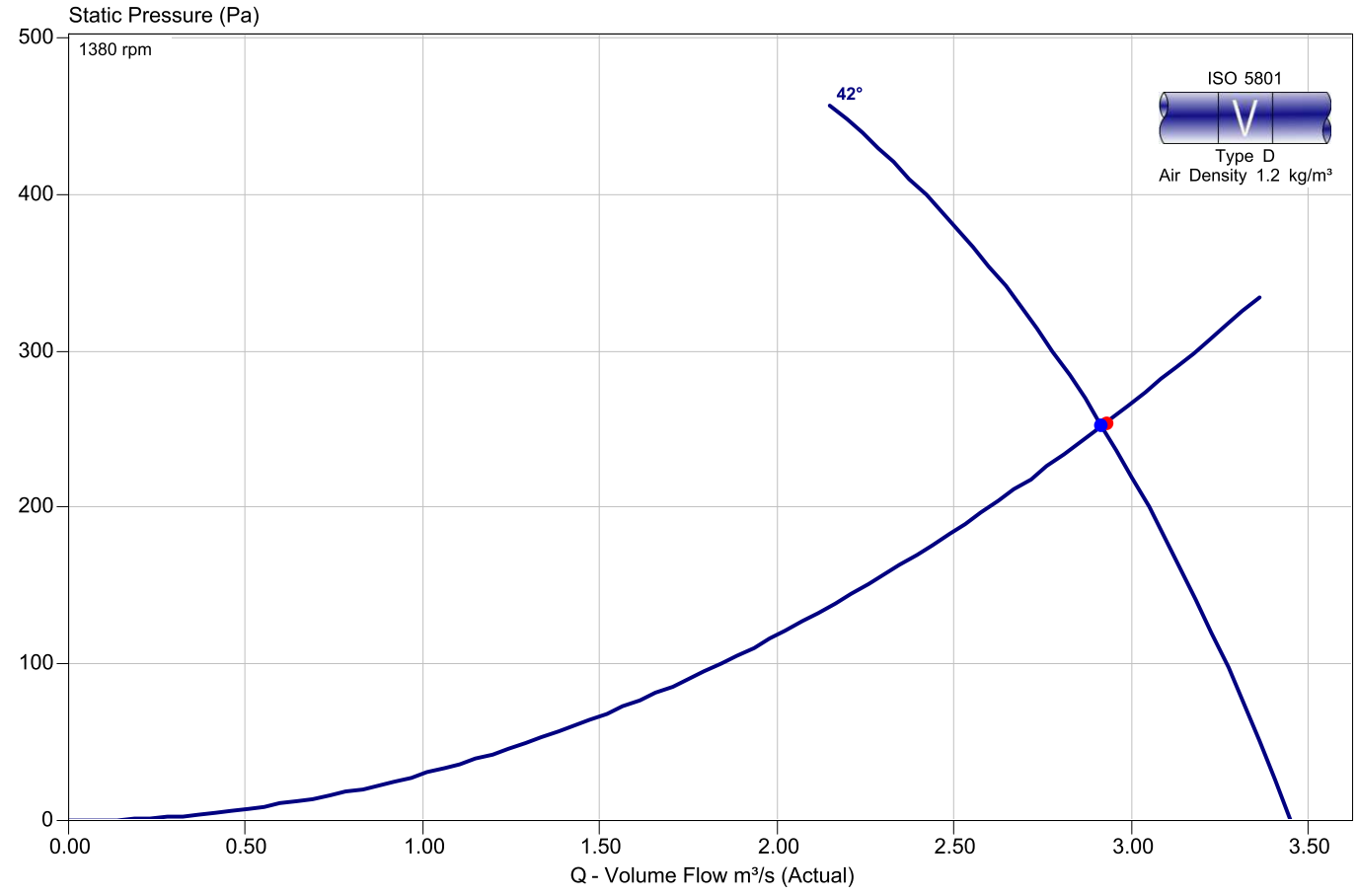

Copyright Fläkt Woods Group 2003 - 2015

Quotation Number	:	Fan Code	: 50-1MaXfan2/16/4/5/42/36
Project Name	:	Customer	:
Item Reference:	:	Date:	: Monday, April 27, 2015

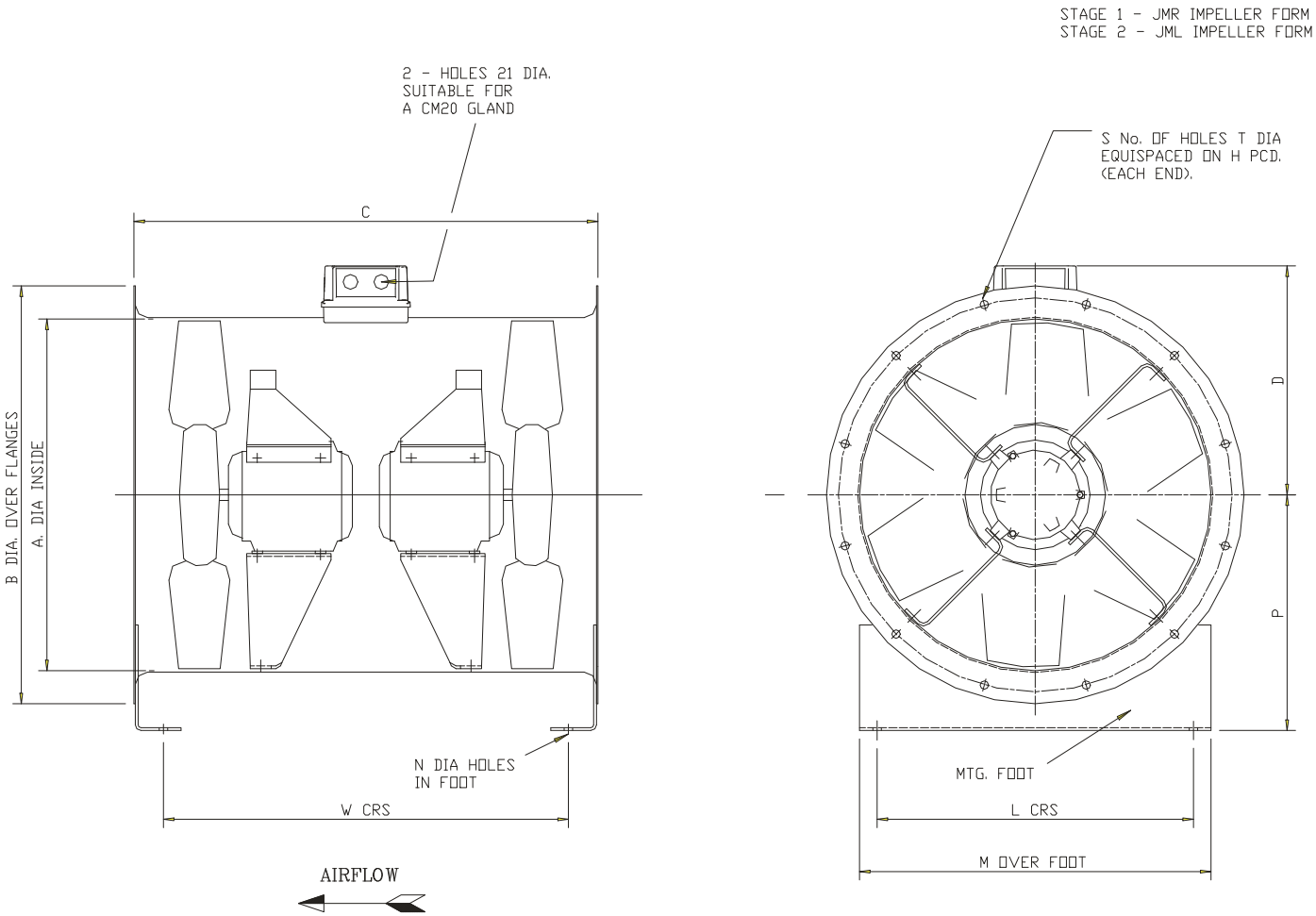

A	500
B	594
C	710
D	338
H	560
L	450
M	500
N	10
P	315
S	12
T	12
W	620
Weight	57

Notes : Dimensions shown in mm / Weight in kg

Reference :Catalogue drawing

This drawing shows dimensions that should be used as a guide only and are subject to change. Certified drawings are available on request.

, ,
Tel: Fax:
Website:
Email: Ayla.Vinter@flaktwoods.com
Copyright Fläkt Woods Group 2003 - 2015