

Client

TESCO STORES LTD

Project

FORMAT 2012 HELLO/RECYCLING TOTEMS

Drawing Register

		Revision									
		Release Date	23/04/12	21-05-12	07-05-14						
Drawing Ref	Description	Type									
180412 01	1900 x 3300 Hello/Recycling Totem	Fab	0	1							
180412 02	1800 x 2800 Hello/Recycling Totem	Fab	0	1	2						
ASG-TES-HRT 03	2000 x 3500 Hello/Recycling Totem	Fab			2						

Revision

Drawing Ref	No	Date	Detail
180412	0	23/04/12	Initial Proposal
180412	1	21-05-12	Concrete base amended and vinyl layout guide added to both totems ZS
180412	2	07-05-14	Artwork updated - OM

ASG DESIGN

www.asg.co.uk

Andrew Wightman - Product Development Manager
awightman@asg.co.uk
01268 706829
07747 446694

Ross Aubin - Senior Designer
raubin@asg.co.uk
01268 706875

Plan View
scale 1:25

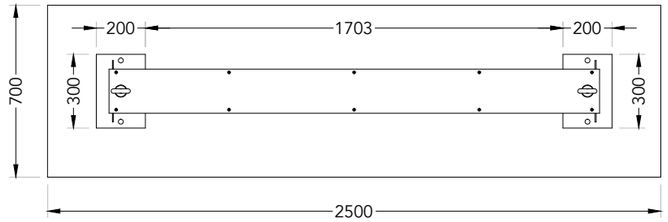

Front Elevation
scale 1:25

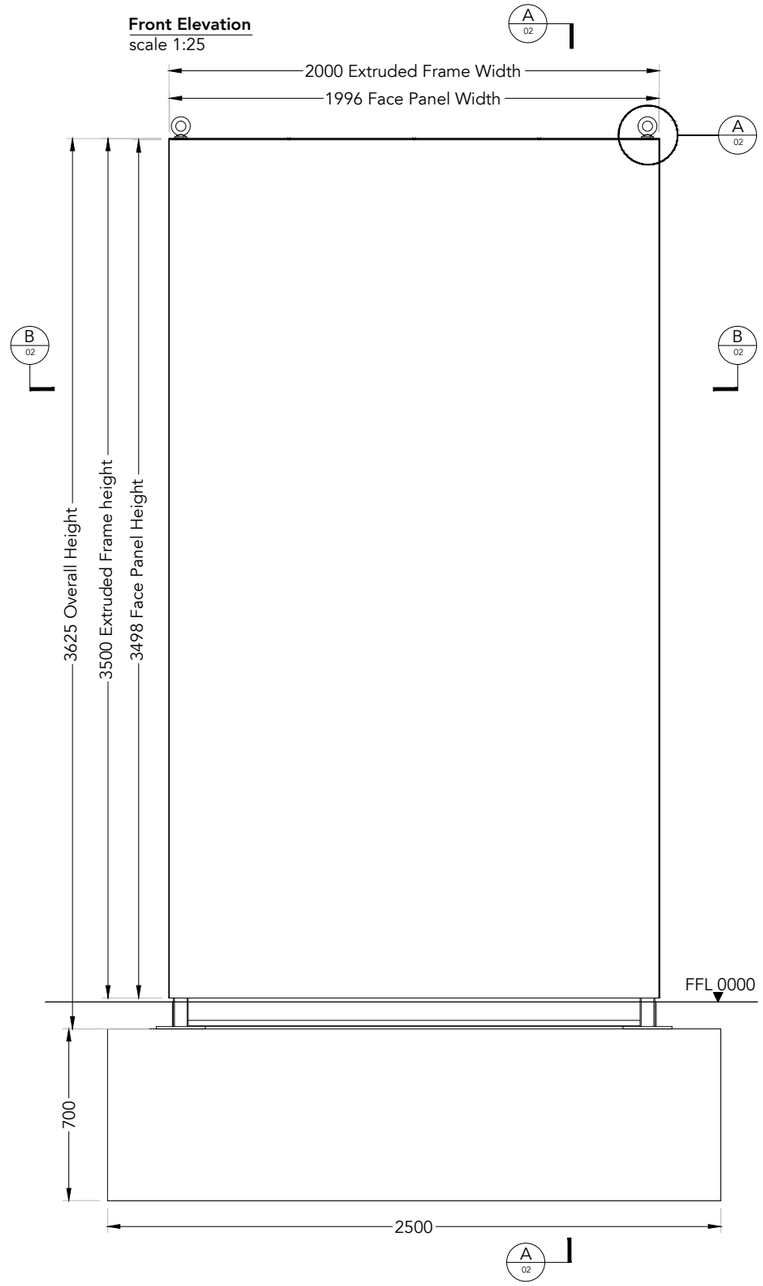

Side Elevation
scale 1:25

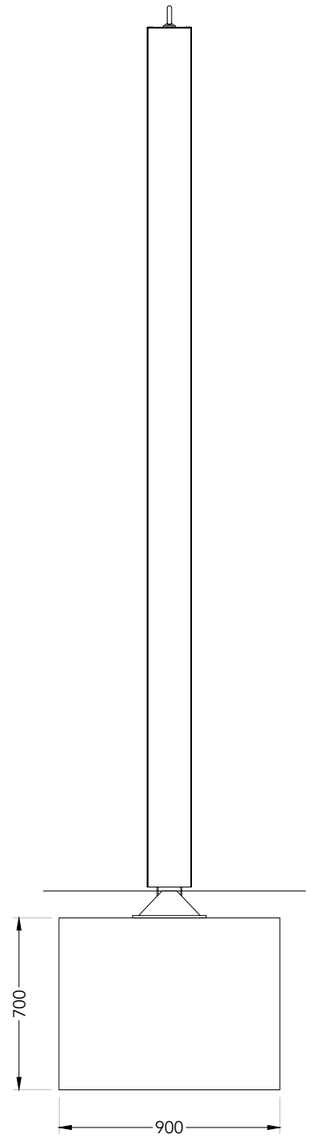

Illustration of Hello Totem
not to scale



Illustration of Recycling Totem
not to scale



218.7 KG

ASG DESIGN

Project manager Sean Lloyd	Client Tesco Stores Ltd	Item description 2000 x 3500 Hello/Recycling Totem - GA	
Designer Zoe Sach	Project 2000 x 3500 Hello/Recycling Totem - Woodtex	Scale - A3 1:25	Rev 02
Date 07-05-14		Dwg no. ASG-TES-HRT 03	Sheet 01

© THIS DRAWING IS COPYRIGHT AND IS THE PROPERTY OF ASG. IT IS TO BE USED BETWEEN THEMSELVES AND THE CLIENT. ANY REPRODUCTION WITHOUT THE WRITTEN PERMISSION OF ASG IS STRICTLY PROHIBITED

AA 01 **Broken Section**
scale 1:5

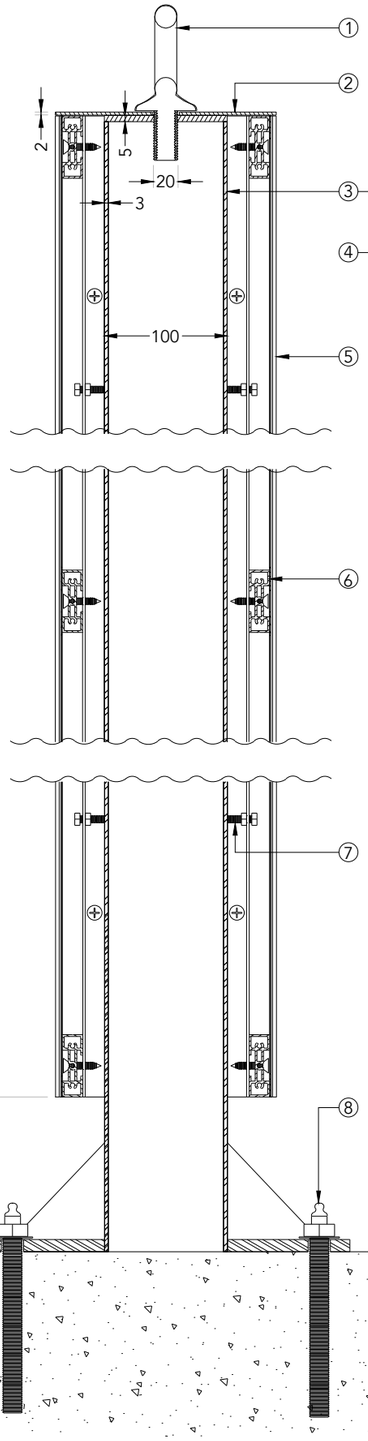

BB 01 **Broken Section**
scale 1:2

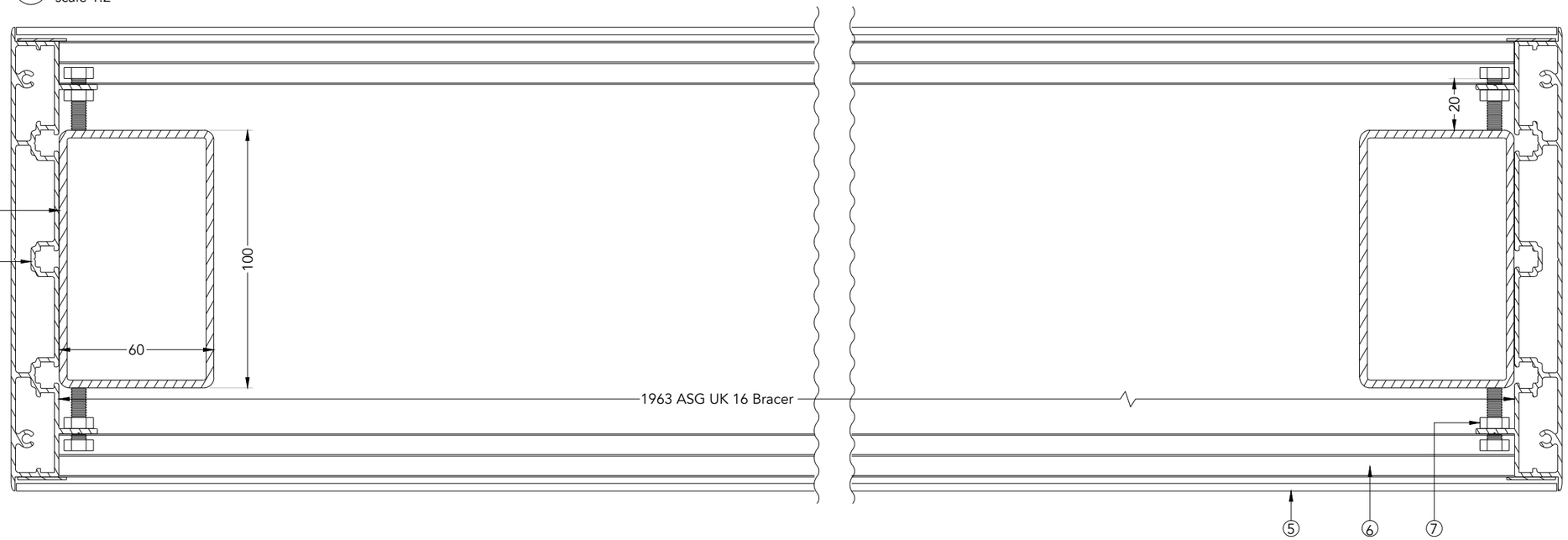

Specification

① M20 eyebolt for transport and installation purposes.

② Extruded aluminium frame capped with 2.5mm aluminium plate fixed into the extruded frame using M5 x 30mm self tapping countersunk stainless steel screws.

③ Internal steel framework from 100mm x 60mm x 3mm mild steel rectangular hollow section with welded cross brace at the top & 10mm thick mild steel base plates welded to the bottom (full penetration with channel welds to rear & dressed fillet welds to the face. Steel to be galvanised to prevent corrosion. Tops capped using 5mm welded mild steel plates, drilled and tapped to accept M20 eyebolts.

④ Sides of the totem from ASG UK 82 with 6 lengths of ASG UK 16 extruded aluminium section as bracers spanned between the two extrusions and mechanically fixed in position. Frame to have Woodtex LWO finish. Frames are sleeved over the steel framework and retained by pressure fit using M6 steel bolts fixed through the extrusion flanges and tightened against the steelwork.

⑤ Face panels from 2.5mm aluminium, powder coated Dark Blue to match PMS 2955c for Hello totems and Red PMS 200c on Recycling totems.Details applied to face using digitally printed self adhesive vinyls. Panels bonded to the extrusion using 3M 5952 double sided V.H.B. Tape applied according to manufacturers guidelines to ensure maximum adhesion.

⑥ ASG UK 16 extruded aluminium section bracers.

⑦ M6 x 25mm steel retaining bolts.

⑧ 4 off 350mm lengths of M16 studding fixed into C35 grade pre-cast concrete base using Fischer FIS V 360 S chemical injection mortar.
NOTE: 4 off M16 Nyloc nuts and 4 off M16 Form G washers required also.

A 01 **Cutaway Detail**
not to scale

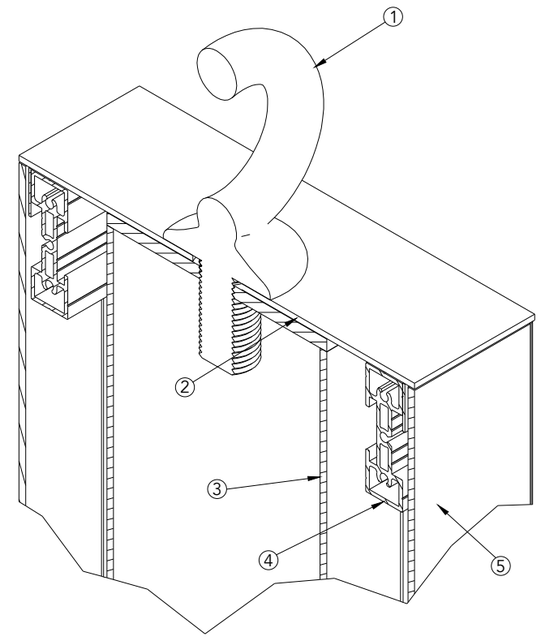

218.7 KG

ASG DESIGN

Project manager Sean Lloyd	Client Tesco Stores Ltd	Item description 2000 x 3500 Hello/Recycling Totem - Specification
Designer Zoe Sach	Project 2000 x 3500 Hello/Recycling Totem - Woodtex	Scale - A3 1:5, 1:2, 1:20
Date 07-05-14		Rev 02
		Dwg no. ASG-TES-HRT 03
		Sheet 02

© THIS DRAWING IS COPYRIGHT AND IS THE PROPERTY OF ASG. IT IS TO BE USED BETWEEN THEMSELVES AND THE CLIENT. ANY REPRODUCTION WITHOUT THE WRITTEN PERMISSION OF ASG IS STRICTLY PROHIBITED

Exploded Isometric View
not to scale

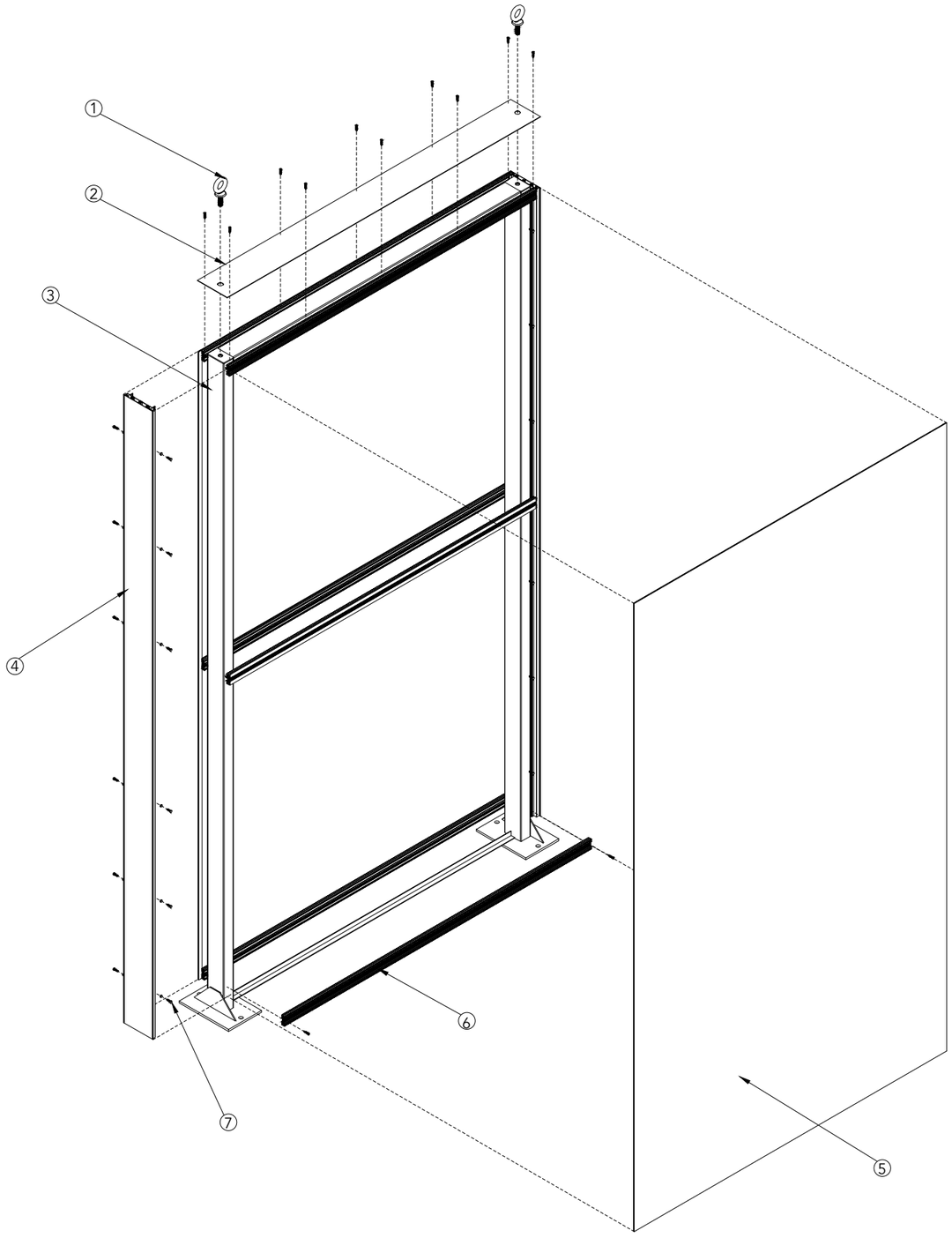

EXTRUSION CUTTING LIST		
Extrusion	**Length**	**Qty**
ASGUK 82	3497	2
ASGUK 16	1962	6

ASG DESIGN

Project manager Sean Lloyd	Client Tesco Stores Ltd	Item description 1900 x 3300 Exploded View
Designer Zoe Sach	Project 1900 x 3300 Hello/Recycling Totem - Woodtex	Scale - A3 Not to scale Rev 02
Date 07-05-14		Dwg no. ASG-TES-HRT 01 Sheet 03

© THIS DRAWING IS COPYRIGHT AND IS THE PROPERTY OF ASG. IT IS TO BE USED BETWEEN THEMSELVES AND THE CLIENT. ANY REPRODUCTION WITHOUT THE WRITTEN PERMISSION OF ASG IS STRICTLY PROHIBITED

STEEL FRAME

Plan View
scale 1:20

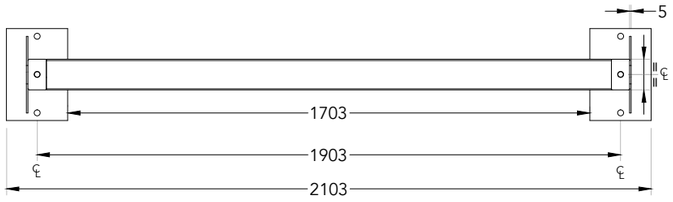

Front Elevation
scale 1:20

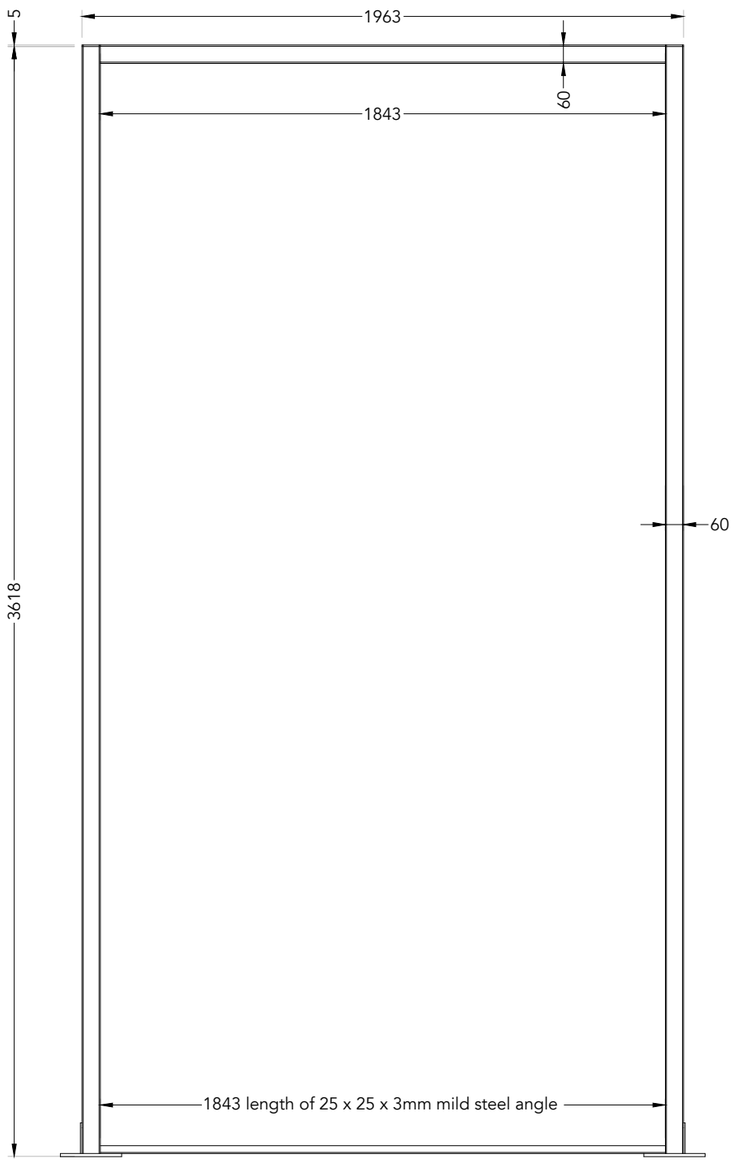

Side Elevation
scale 1:20

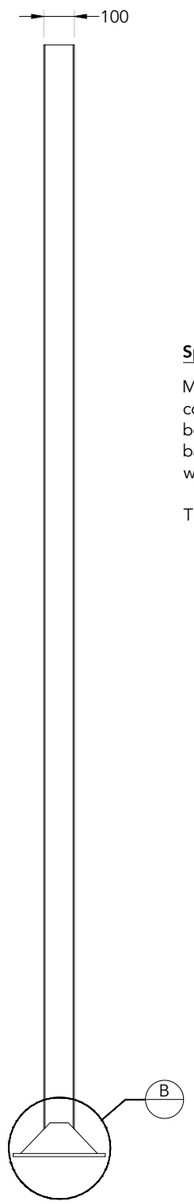

Base Plate Detail
scale 1:4

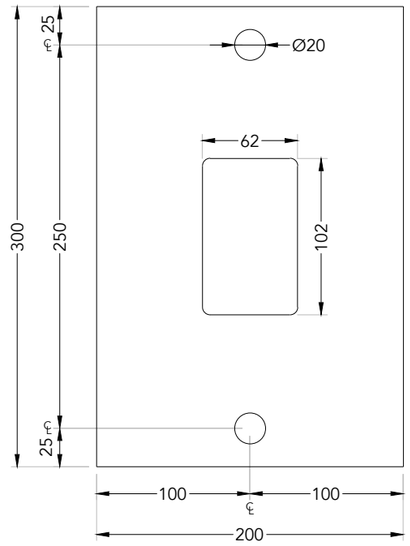

Specification

Main frame from 100mm x 60mm x 3mm wall mild steel rectangular hollow section, complete with a 100mm x 60mm x 3mm mild steel rectangular hollow section welded between the two posts (continuous fillet weld). 300mm x 200mm x 10mm mild steel base plates are welded to the bottom of the two vertical posts (full penetration channel weld to rear and dressed fillet welds to the face.

The frame is to have a galvanised finish to prevent corrosion

B **Detail**
scale 1:4

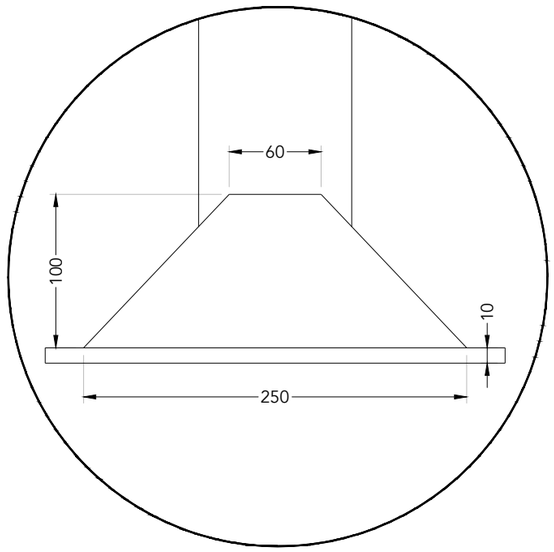

Isometric View
not to scale

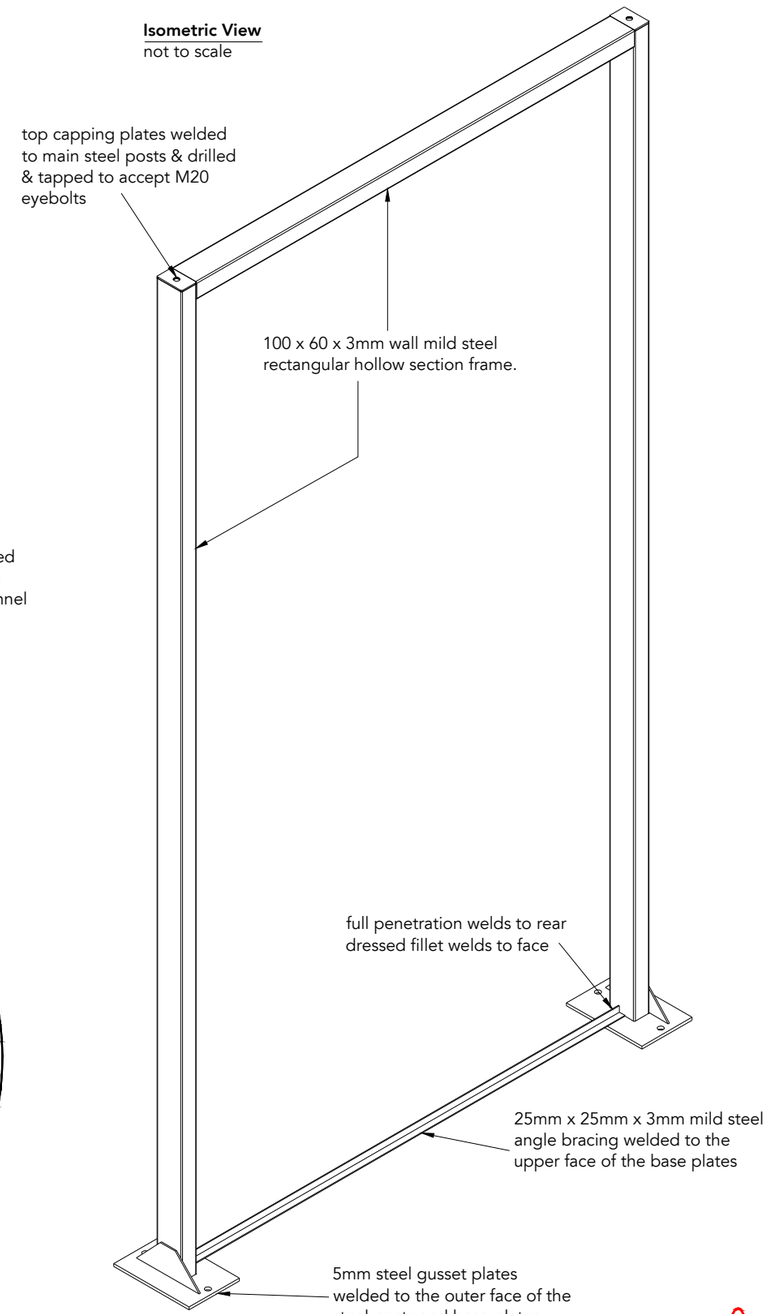

98 KG

ASG DESIGN

Project manager Sean Lloyd	Client Tesco Stores Ltd	Item description 2000 x 3300 Hello/Recycling Totem Frame - FAB
Designer Zoe Sach	Project 2000 x 3500 Hello/Recycling Totem - Woodtex	Scale - A3 1:20, 1:4 / Rev 02
Date 07-05-14		Dwg no. ASG-TES-HRT 03 / Sheet 04

© THIS DRAWING IS COPYRIGHT AND IS THE PROPERTY OF ASG. IT IS TO BE USED BETWEEN THEMSELVES AND THE CLIENT. ANY REPRODUCTION WITHOUT THE WRITTEN PERMISSION OF ASG IS STRICTLY PROHIBITED

EXTRUDED FRAME

Plan View
scale 1:20

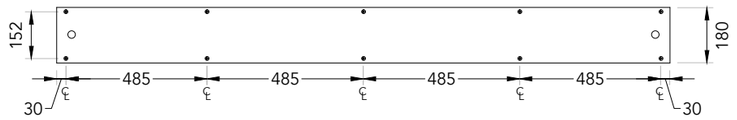

BB Section
scale 1:10



Front Elevation
scale 1:20

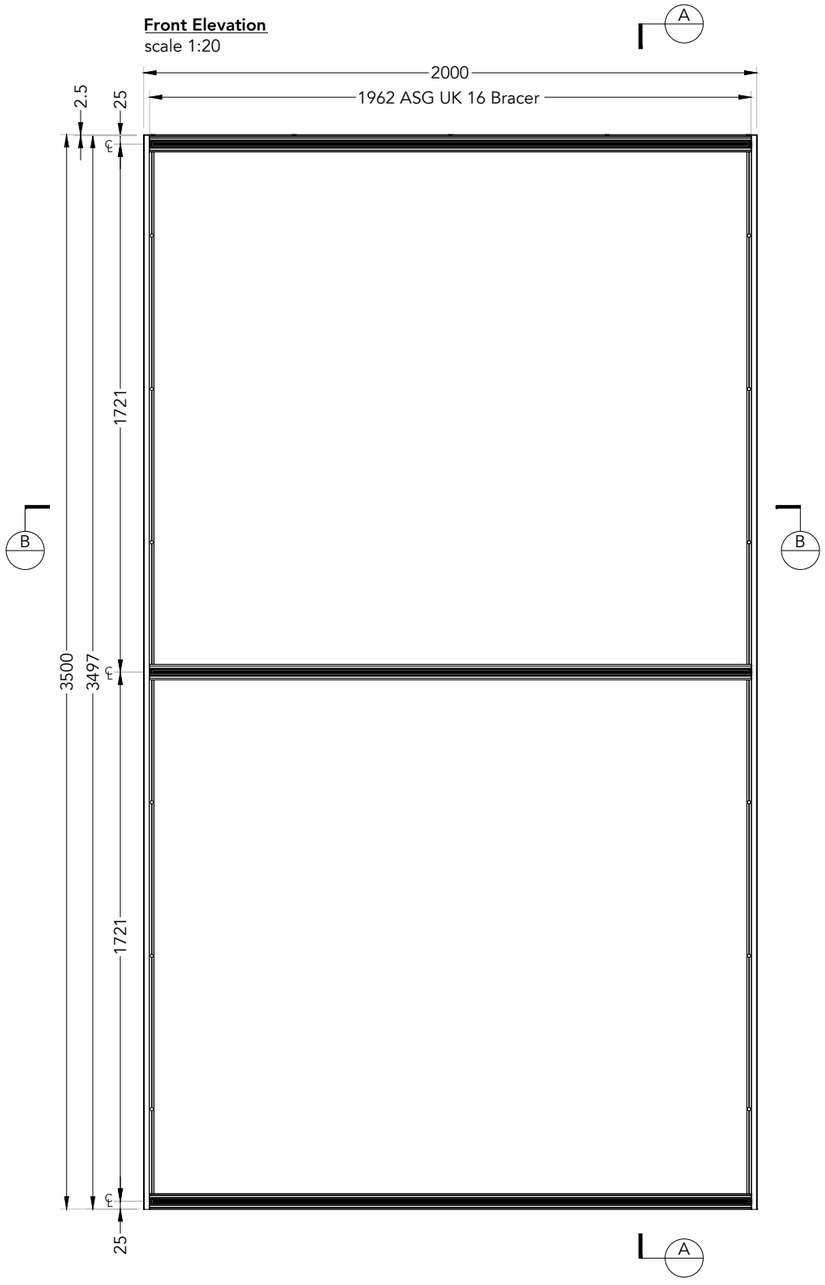

Side Elevation
scale 1:20

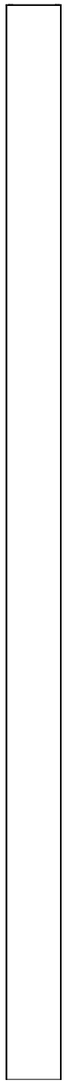

AA Section
scale 1:20

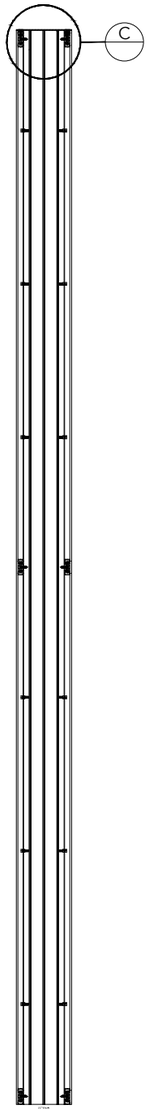

C Detail
scale 1:3

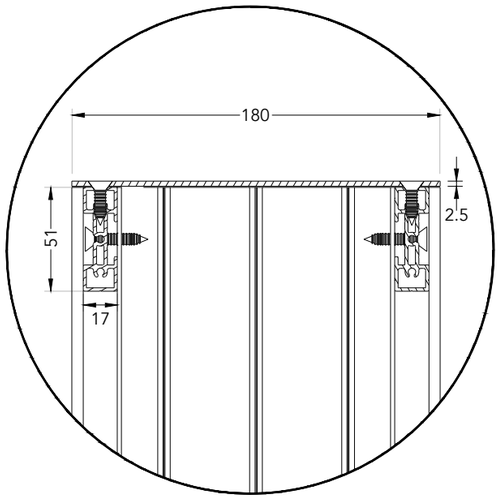

Specification

Vertical sections of the frame from ASG UK 15 extruded aluminium section with ASG UK 16 extruded aluminium section bracers, mechanically fixed into main extrusion flanges. Frame to have a 2.5mm aluminium top cap fixed into the upper cross brace using M5 x 30mm stainless steel countersunk self tapping screws.

Framework is to have Woodtex LWO finish.

Panel is sleeved over the internal steel framework and is retained by pressure fit using M6 x 30mm steel bolts and nuts fixed through the extrusion flanges on the main vertical sections.

Isometric View
scale 1:20

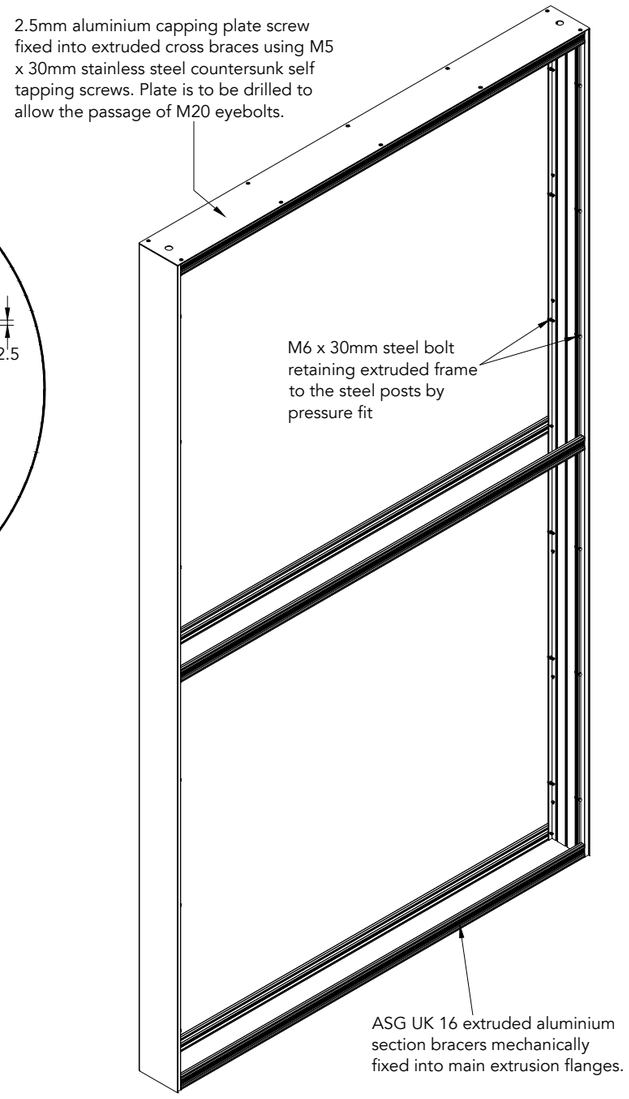

32KG

ASG DESIGN

Project manager Sean Lloyd	Client Tesco Stores Ltd	Item description 2000 x 3500 Extruded Frame - FAB	
Designer Zoe Sach	Project 2000 x 3500 Hello/Recycling Totem - Woodtex	Scale - A3 1:20, 1:10, 1:3	Rev 02
Date 07-05-14		Dwg no. ASG-TES-HRT 03	Sheet 05

© THIS DRAWING IS COPYRIGHT AND IS THE PROPERTY OF ASG. IT IS TO BE USED BETWEEN THEMSELVES AND THE CLIENT. ANY REPRODUCTION WITHOUT THE WRITTEN PERMISSION OF ASG IS STRICTLY PROHIBITED

FACE PANELS

Hello Totem - Front Elevation
nts

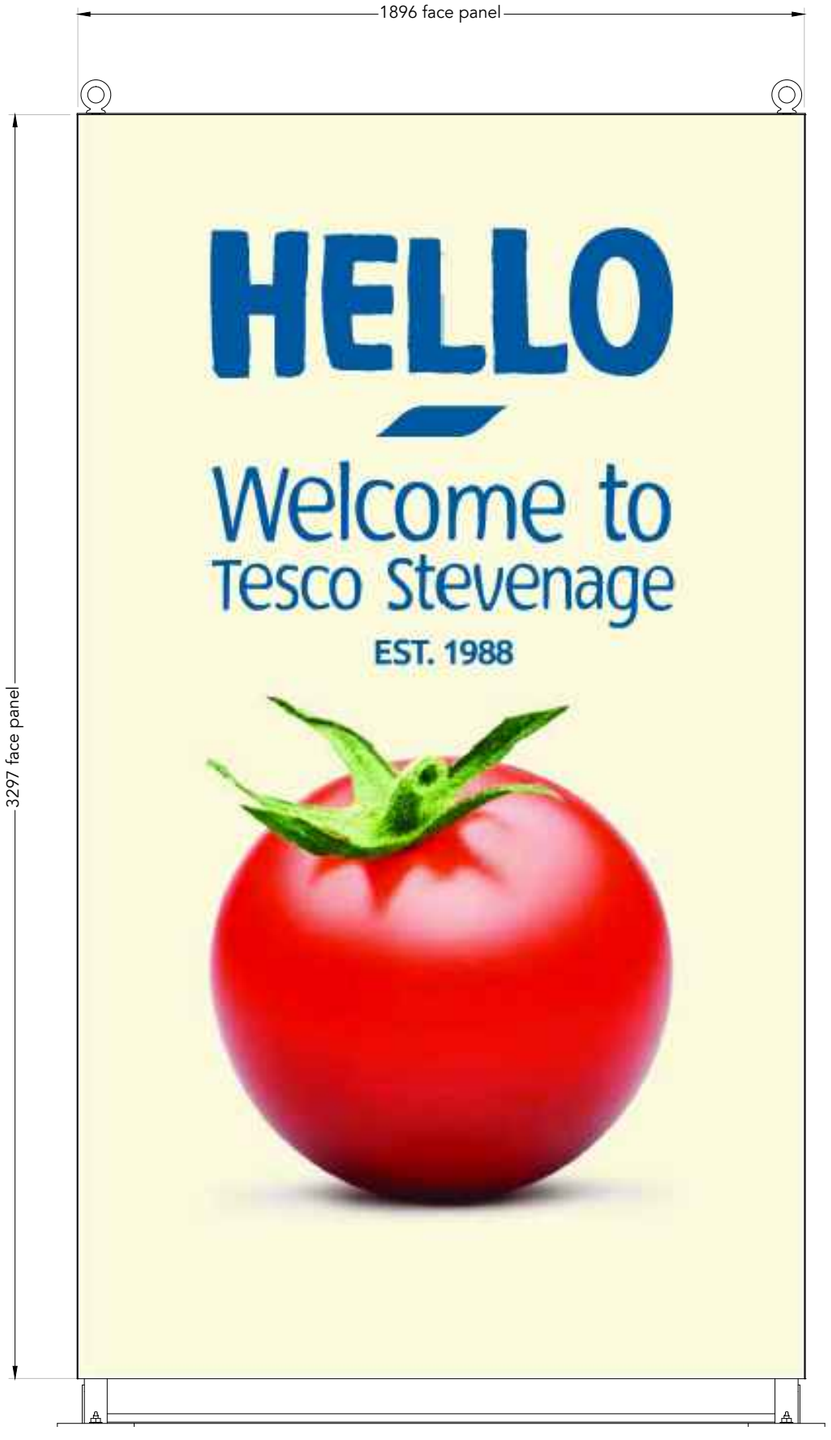

Recycling Totem - Front Elevation
nts

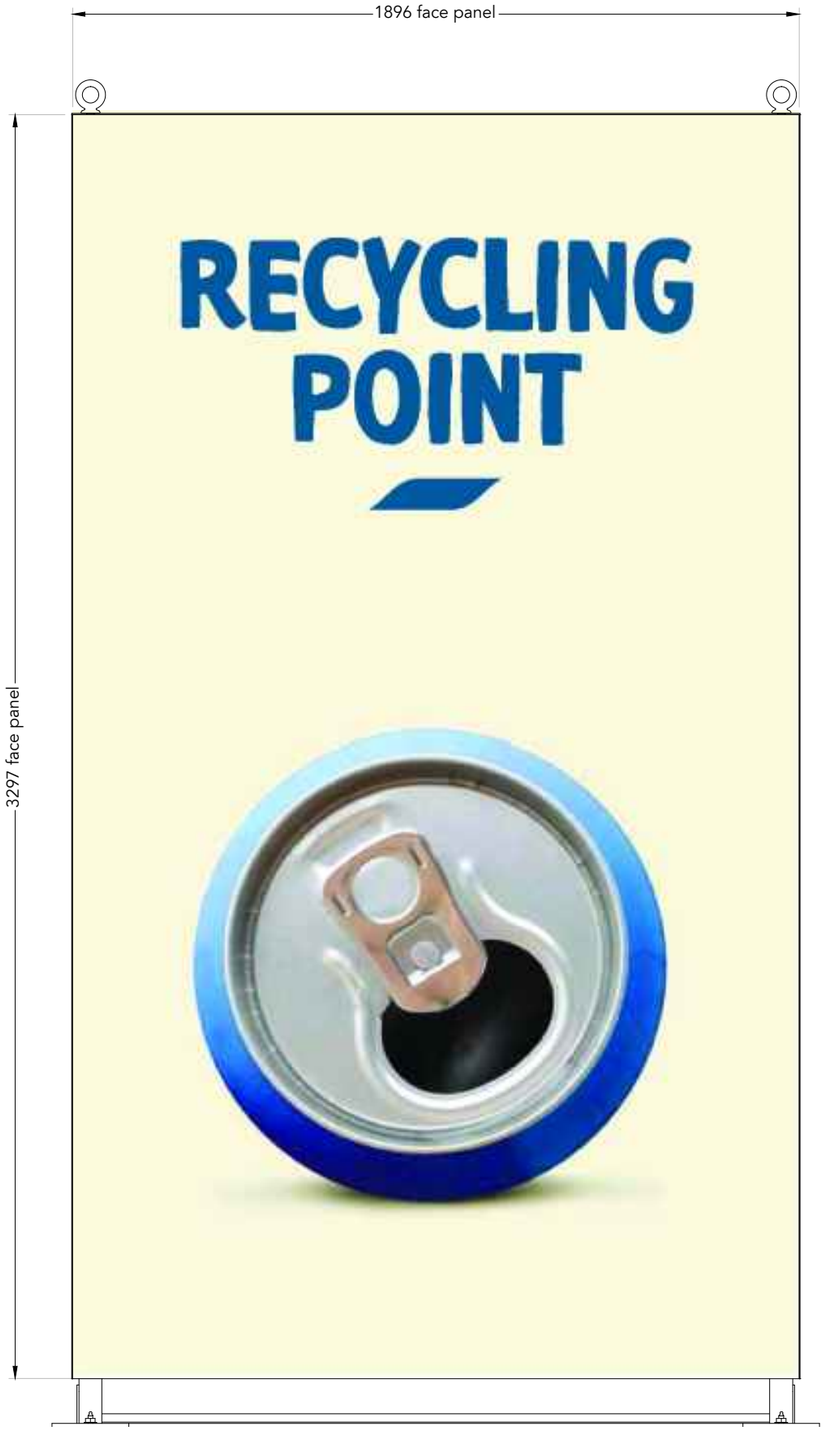

Specification

Face panels from 2.5mm Aluminium sheet, primed and powder coated to match Dark Blue to match PMS 2955c for the Hello Totems and to match Red PMS 200c for the Recycling Totems. Details are applied to the face using digitally printed self adhesive vinyls.

Panels are bonded to the main extrusion frame using 3M 5952f double sided V.H.B. Tape, applied according to the manufacturers recommended guidelines to ensure maximum panel adhesion.

PLEASE NOTE THAT THESE TOTEMS CAN BE SINGLE OR DOUBLE SIDED

218.7 KG

ASG DESIGN

Project manager Sean Lloyd	Client Tesco Stores Ltd	Item description Vinyl Positioning Guide
Designer Zoe Sach	Project 2000 x 3500 Hello/Recycling Totem - Woodtex	Scale - A3 DO NOT SCALE Rev 02
Date 07-05-14		Dwg no. ASG-TES-HRT 03 Sheet 06

© THIS DRAWING IS COPYRIGHT AND IS THE PROPERTY OF ASG. IT IS TO BE USED BETWEEN THEMSELVES AND THE CLIENT. ANY REPRODUCTION WITHOUT THE WRITTEN PERMISSION OF ASG IS STRICTLY PROHIBITED

BASE DETAILS

Plan View
scale 1:10

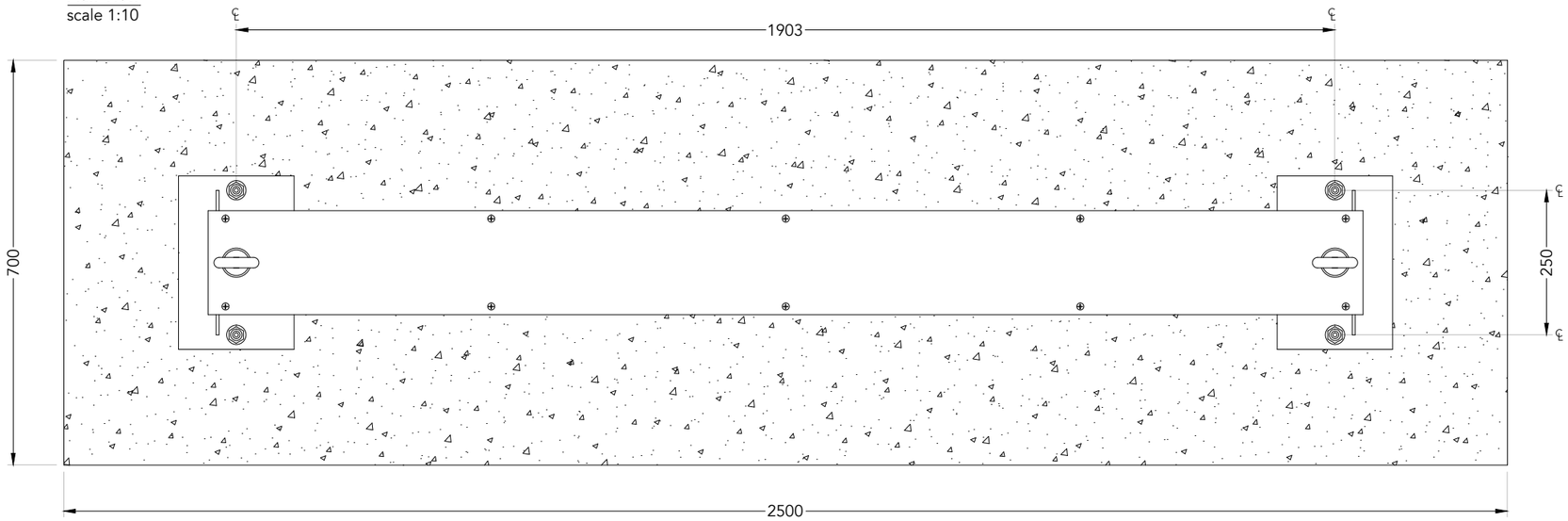

Base Fixings Required:

4 off 350mm lengths of M16 studding
4 off M16 Nyloc nuts
4 off M16 Form G washers
Fischer FIS V 360 S chemical injection mortar

Front Elevation
scale 1:10

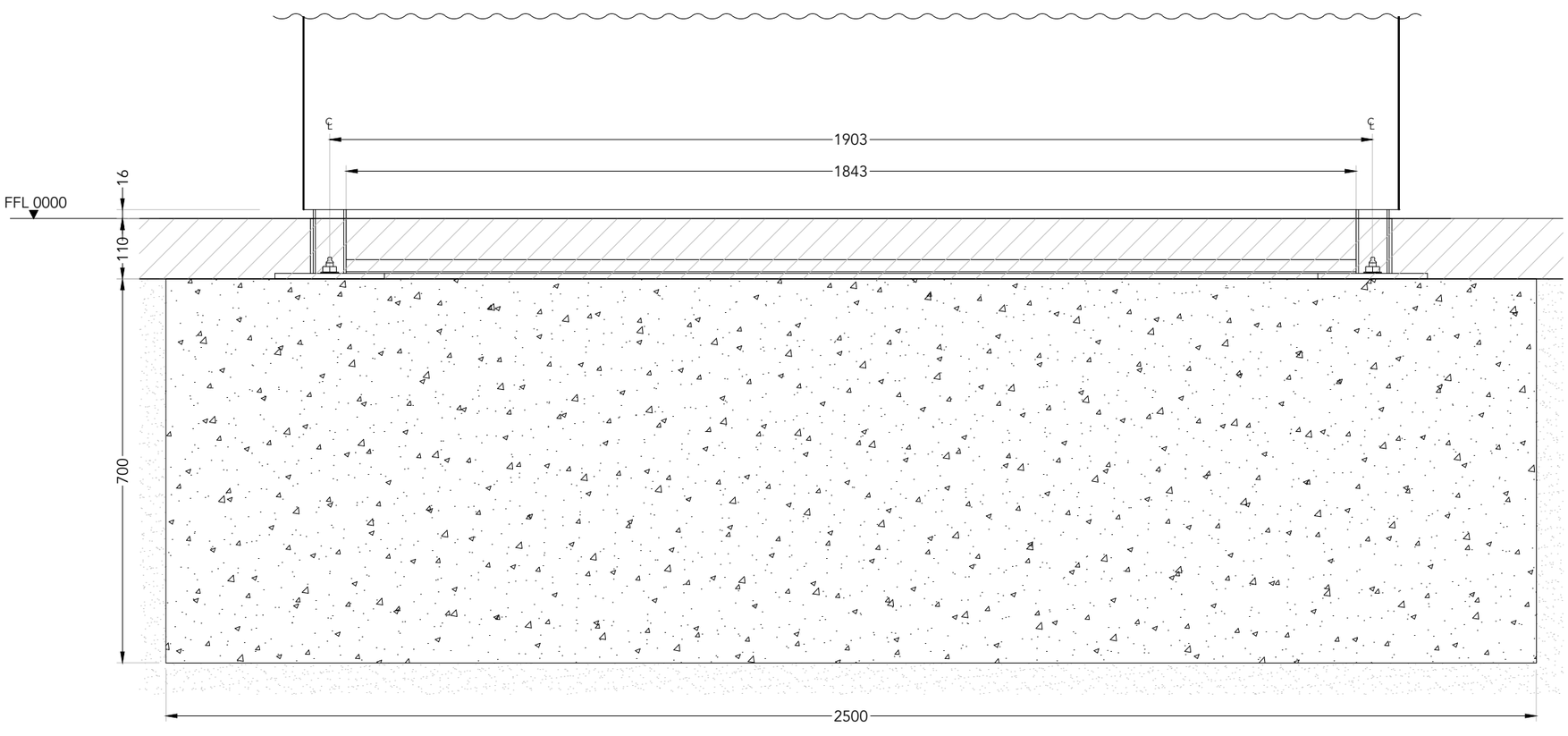

Side Elevation
scale 1:10

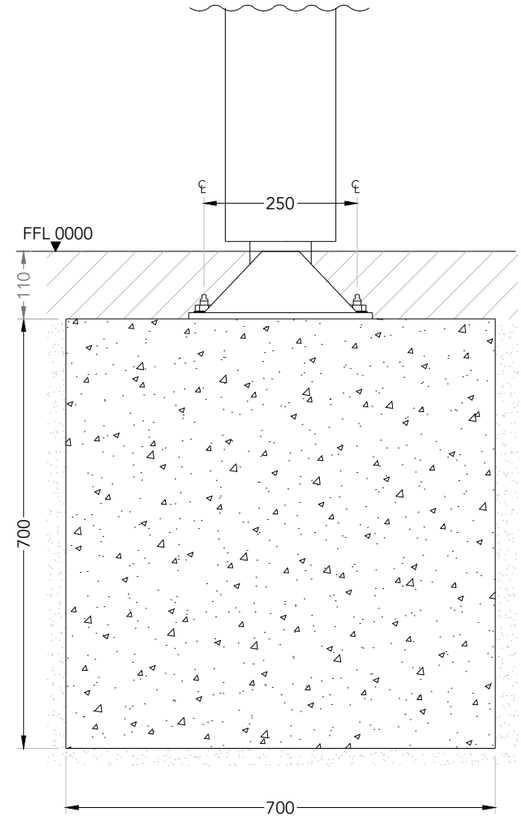

218.7 KG

ASG DESIGN

Project manager Sean Lloyd	Client Tesco Stores Ltd	Item description 2000 x 3500 Base Details	
Designer Zoe Sach	Project 2000 x 3500 Hello/Recycling Totem - Woodtex	Scale - A3 1:10	Rev 02
Date 07-05-14		Dwg no. ASG-TES-HRT 03	Sheet 03

© THIS DRAWING IS COPYRIGHT AND IS THE PROPERTY OF ASG. IT IS TO BE USED BETWEEN THEMSELVES AND THE CLIENT. ANY REPRODUCTION WITHOUT THE WRITTEN PERMISSION OF ASG IS STRICTLY PROHIBITED