Q.29568

The Parrswood Hotel

Manchester

MJC **Gnd Flr Proposal** D 41

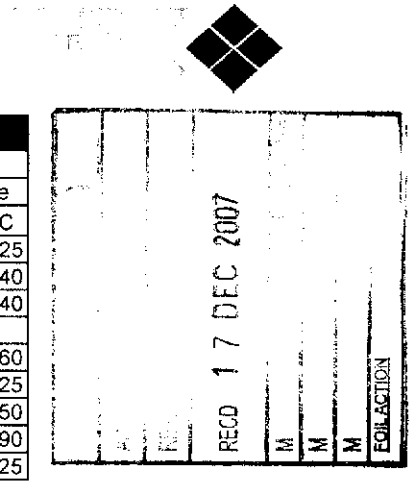

HVCA DW/172 Specification For Kitchen Ventilation Systems

Appliance, Coefficient, and Temperature Schedule

Ref	Item	Plan Size Length mm	x	Width mm	Power	Area M^2	Coefficient	Flow Rate M^3/s	Flow Rate CFM	Surface Temp °C
24	Bench	780	x	300	N/A	0.234	0.03	0.01	15	25
25	Heavy Duty Fryer	560	x	700	Gas	0.392	0.5	0.20	415	240
26	Heavy Duty Fryer	560	x	700	Gas	0.392	0.5	0.20	415	240
27	U/C Refrigeration	620	x	595	Electric	0.369	0.03	0.01	23	N/A
28	Steakhouse Grill	800	x	545	Gas	0.436	0.75	0.33	693	260
29	Bench	950	x	750	N/A	0.713	0.03	0.02	45	25
30	Char grill	600	x	770	Gas	0.462	0.95	0.44	930	350
31	Oven Range	900	x	770	Gas	0.693	0.35	0.24	514	190
32	Bench	270	x	780	N/A	0.211	0.03	0.01	13	25
							Theoretical Extract Volume Required:	1.45	3065	
Canopy Type:	Overhead Wall Canopy, Open Both Ends				**Canopy Factor:**	**1.25**				
							Specific Extract Flow Rate Required	**1.81**	**3831**	
							Recommended Replacement air in line with DW/172 85%	**1.54**	3256	

Canopy Face Velocity	Canopy Dimensions Length	x	Width	Area	Face Velocity M/Sec	Face Velocity Ft/Min	Flow Rate M^3/s	Flow Rate CFM
Face Vel. @ 172 flow rates	4304	x	1100	4.73	0.38	75	1.81	3831

Important Notes: The calculated flow rates detailed above, are subject to amendment in accordance with future revisions to catering layouts.

Die cast aluminium blades with aerofoil design.Powered by a 100% fully speed controllable external rotor motor. All motors have class F insulation and IP54 enclosure. Sealed for life bearings.A terminal enclosure to IP54 is included.

Motors have TK thermal protection facility.

Pressed galvanised wall plate with full bellmouth finished in two coats of corrosion resistant paint. Inlet guard is supplied as standard.

Temperature operating range is - 40 C up to 60 or 70 C (see table).

4 & 6 pole units illustrated .8 pole units available for size 630mm.

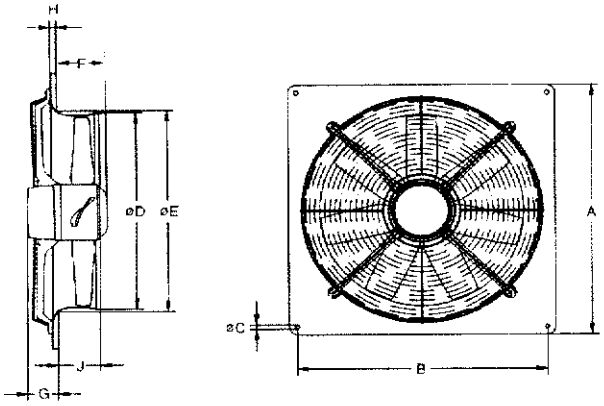

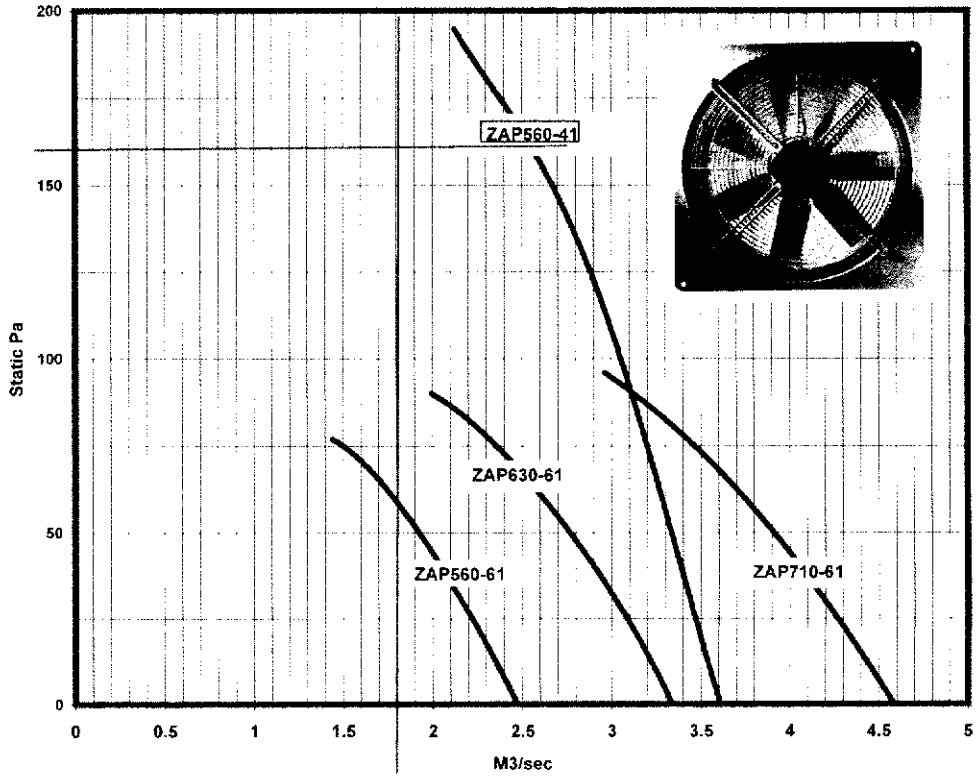

TECHNICAL DATA AND GENERAL DIMENSIONS

MODEL	RPM Nom	MOTOR KW	FLC/SC Amps	WIRING DIAG NO (PAGE 39(39)	Max Air Deg C	dBa @ 3 M	Weight Kg	ELECTRONIC CONTROLLER (SEE PAGE 37)	TRANSFORMER CONTROLLER	A	B	C	D	E	F	G	H	J
ZAP560-41	1300	1.6	6.5/15	104X	60	68	25	SC8	RTRE7	725	675	11	568	589	160	62	16	119
ZAP560-61	880	0.43	1.95/4.6	104X	65	55	16.5	SC3	RTRE3	725	675	11	568	589	160	62	16	119
ZAP630-61	880	0.6	2.7/5.3	104X	60	59	19.8	SC5	RTRE3	805	750	11	643	670	154	66	20	130
ZAP710-61	850	0.89	4.1/8	104X	60	61	32	SC5	RTRE5	850	810	14.5	720	763	202	66	20	130

Die cast aluminium blades with low noise sickle blade design.Powered by a 100% fully speed controllable external rotor motor. All motors have class F insulation and IP54 enclosure. Sealed for life bearings.A terminal enclosure to IP54 is included.

Motors have TK thermal protection facility.

Pressed galvanised steel wallplate with full bellmouth finished in two coats of corrosion resistant paint. Inlet guard supplied as standard

Temperature operating range is - 40 C up to 60 or 70 C (see table).

4 pole units illustrated . 6 pole units available for sizes 400-500mm.

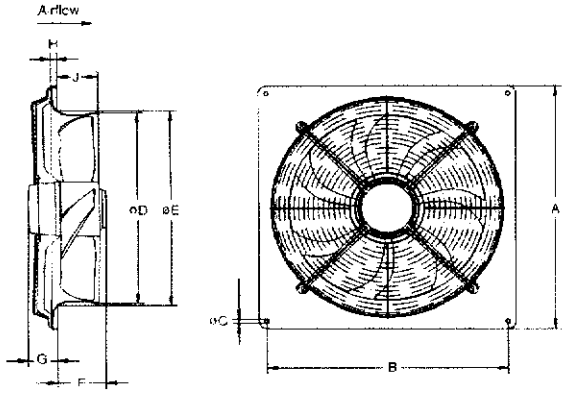

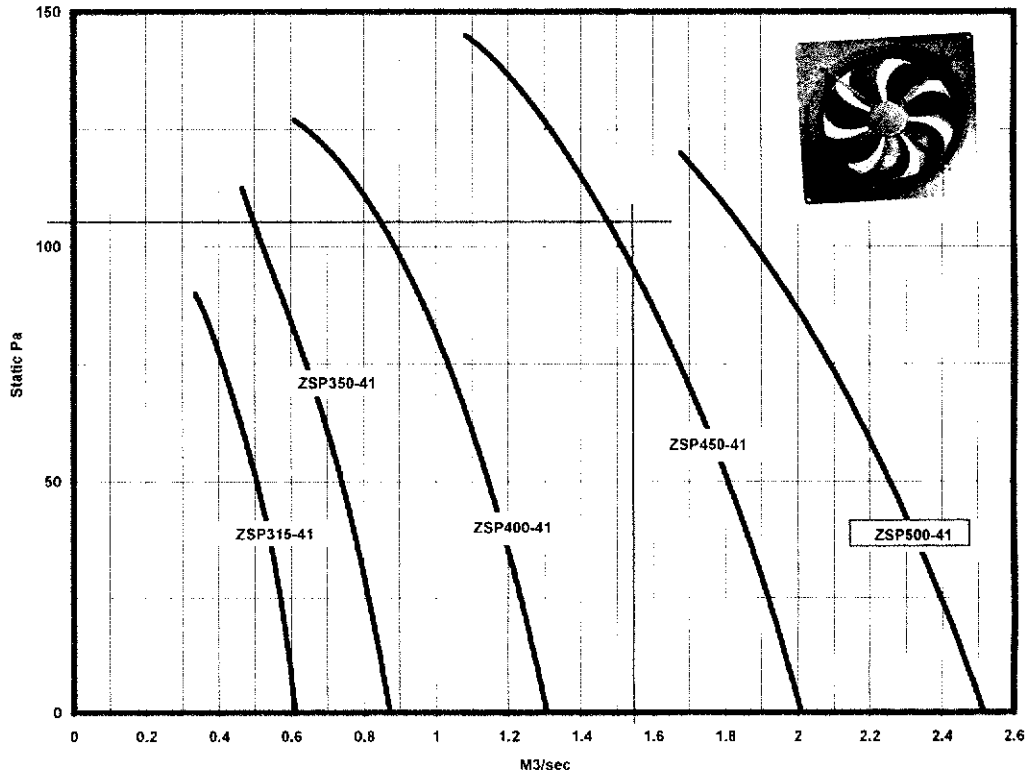

TECHNICAL DATA AND GENERAL DIMENSIONS

MODEL	RPM Nom	MOTOR KW	FLC/SC Amps	WIRING DIAG (PAGE 38/39)	Max Air Deg C	dBa @ 3 M	Weight Kg	ELECTRONIC CONTROLLER (SEE PAGE 37)	TRANSFORMER CONTROLLER	A	B	C	D	E	F	G	H	J
ZSP315-41	1400	0.13	0.59/1.5	104X	70	46	6.1	SC1.5	RTRE1.5	430	380	9	320	328	84	81	11	70
ZSP350-41	1400	0.2	0.9/2.5	104X	70	49	7.2	SC1.5	RTRE1.5	485	435	9	367	372	97	87	12	75
ZSP400-41	1320	0.31	1.35/2.9	104X	60	51	10.2	SC1.5 OR SC3	RTRE1.5	540	490	9	412	420	104	87	12	88
ZSP450-41	1310	0.61	2.8/7	104X	60	55	15.1	SC5	RTRE3	575	535	11	463	480	143	75	14	96
ZSP500-41	1210	0.77	3.4/7.4	104X	60	53	19.2	SC5	RTRE5	655	615	11	528	528	141	77	16	104