c18109e3-84c4-141-0ede-d05685b5188c

Drawing Number
NHE_127523-2405-COL-SA4-DDR-C-160260 B01

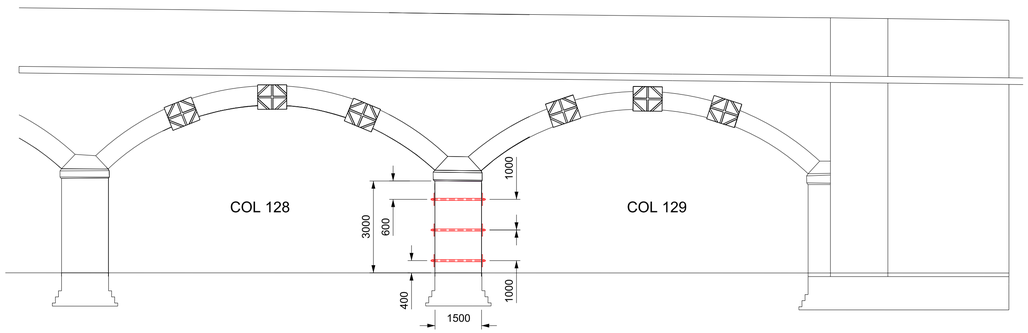

1 Elevation
Scale 1:100

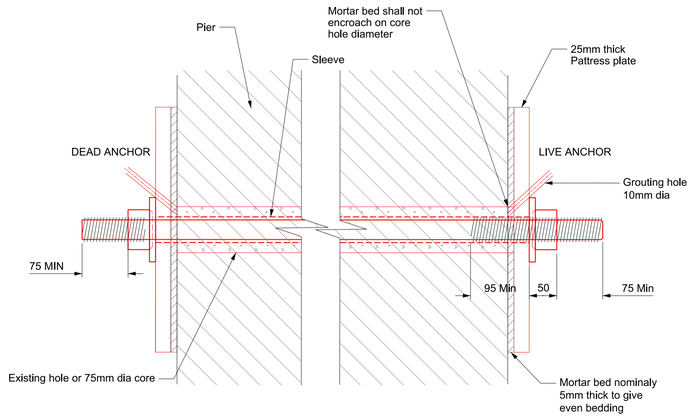

4 Details of Post Tension Bar Arrangement
Scale 1:5

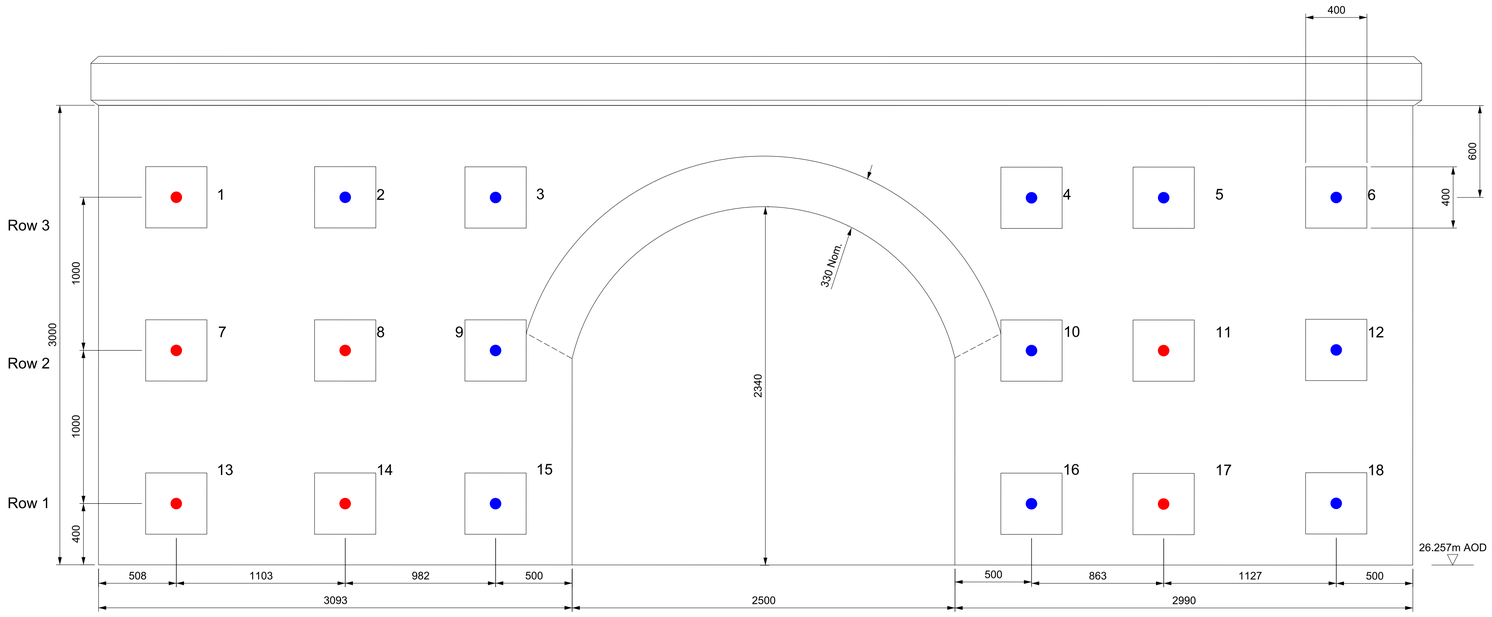

2 Low Mileage Pier Elevation (Viewed From Span 128)
Scale 1:20

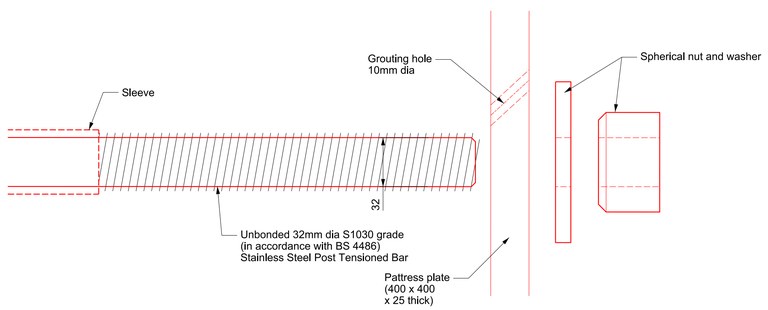

3 Details of Post Tension Bar Head
Scale 1:2

CDM-COL-02	Instability of pier due to release of stressing bars	⚠
CDM-COL-05	Potential flying debris during cleaning of tiebar holes.	⚠
CDM-COL-11	Exposed end of threaded bars to be protected with plastic or stainless steel caps, greased internally to facilitate removal.	⚠

Construction sequence

A. Existing temporary soldiers and ties in Row 1 to be removed without disturbing temporary works in Rows 2 and 3
B. New Row 1 holes to be cored through the pier brickwork
C. New holes in Row 1 to be cleaned using compressed air.
D. The pattress plate and tie bar assemblies to be installed with pattress plates mortared in accordance with note 4, ensuring that grouting holes are positioned uppermost and are aligned to provide a continuous grouting route into the hole.
E. Stress tie bars in Row 1 and lock off as described in notes 5 and 6. The stress in the bars is to be raised in 3 equal increments with visual checks after each to confirm that there is no distress to the masonry. If distress is found the stressing is to be stopped and the issue referred to the designer.
F. Existing temporary soldiers and ties in Row 2 to be removed without disturbing temporary work in Row 3 or permanent ties in Row 1.
G. New Row 2 holes to be cored through pier brickwork.
H. New holes in Row 2 to be cleaned using compressed air.
I. Install pattress plate and tie bar assemblies in Row 2 as described in step D then stress as described in step E.
J. Works on Row 3 to be performed during possession with no live loads on spans COL 128 or 129, refer to step O.
K. Remove temporary Row 3 waler and core new holes through the pier.
L. Row 3 waler and temporary ties to be reinstated and stressed if possession time is insufficient for installation and stressing of new ties in compliance with step O.
M. Install tie bars in Row 3 as described in step D
N. Stress tie bars as described in step E prior to permitting rail traffic to use the viaduct or other live loads to access spans COL 128 or 129.
O. The viaduct may be open to rail traffic and other live loads may be permitted to access spans COL 128 and 129 with a combination of permanent bars and temporary bars in place and stressed in Row 3 as long as at least 2 stressed temporary or permanent bars are in place in Row 3 on each side of the relieving arch. The Row 3 walers may be split at the central bolted joint or cut to reduce work required in a single possession. The contractor must take measures to ensure that the stress in the temporary ties remains in accordance with the temporary works requirements when adjustments are made to the system.
P. Once all permanent ties are installed (ties 1 to 18) core holes are to be grouted in accordance with Notes 8 and 10.
Q. Holes cored for the temporary ties are to be grout filled in accordance with Note 8. The face is to be made good with matching bricks in accordance with heritage requirements.

© AMM JV This document is issued for the Northern Hub & Electrification Alliance and for specific purposes connected with the captioned project only. It should not be relied upon by any other party or used for any other purpose.
We accept no responsibility for the consequences of this document being relied upon by any other party, or being used for any other purpose, or containing any error or omission which is due to an error or omission in data supplied to us by other parties.

0 100 200 300 400 500mm — SCALE 1:5
0 40 80 120 160 200mm — SCALE 1:2
0 0.4 0.8 1.2 1.6 2.0m — SCALE 1:20
0 2 4 6 8 10m — SCALE 1:100

Legend/Notes

1. All dimensions are in mm.
2. Do not scale from drawing.
3. The positions shown are reliant on the survey information provided by contractor.
4. The pattress assembly shall be bedded on mortar (max 10mm thickness) and the nut hand tightened. Once the mortar is set the tie bar nuts shall be tightened to provide the nominal load required by the design. Pattress plates should be installed in accordance with the manufacturers instructions.
5. Pattress plate mortar to be confirmed to have a cube strength of 20N/mm² by crushing 3 site cured cubes which must all have a strength in excess of 20N/mm² prior to bar stressing.
6. Tie bars to be stressed with a force of 180kN± 10kN.
7. Pattress plates to be stainless steel grade S275J0.
8. All holes to be filled with non-shrink cementitious grout. Non-shrink grout shall have a minimum fcu=40N/mm² (28days). Water/cement ratio shall not exceed 0.45. Grout cube samples (6no.) shall be taken and tested.
9. Pattress plates to be positioned such that grout holes are uppermost.
10. Grouting of all holes to be completed in single operation to maximise grout consistency and reduce presence of air and bleed water in the grouting equipment.
11. Work may not commence until Planning & Listed Building consent has been received.
12. For details of existing temporary works design, refer to document set: Castlefield Viaduct Spans 128-129 Pier Restraint System (Form 002 Submission)

DRAWING ACCEPTANCE		
	PROJECT ENGINEER	RAM REPRESENTATIVE
NAME		
SIGNATURE		
DATE		

Key
- Bar in existing hole
- Bar and new hole

Rev	Date	Description of Revisions	Drawn	Chkd	Appr
P01	06/07/16	First Issue	BT	PR	PR
B01	12/07/16	First Issue	BT	PR	PR

Status: Fit for Construction Approval
Suitability: S4

northernhub alliance

Authorised	B.Duguid	Signed	Date 12/07/16
Contractor(s)	Skanska Construction UK Ltd		
Location	LONDON RD JN - ORDSALL LANE JN (MSJ&A LINE)(L26)		
Type	CAD Drawing	Sub-type	
Role	Civil Engineer	Sub-Role	Structures and Buildings
Zone	Stage A4		
Phasing		Grip Stage	5
Project	Northern Hub and Electrification		
Contract No.	127523		
Contract Title	Central GRIP 2 to 8		
Drawing Title	COL128/129 Pier Strengthening Works		
Designed	B. Taylor	Signed	Date 06/07/16
Drawn	B.Taylor	Signed	Date 06/07/16
Checked	P.Robinson	Signed	Date 06/07/16
Approved	P.Robinson	Signed	Date 06/07/16
Scale(s)	As Shown	ELR & Mileage	188.0924 to 190.0615
Alternative Reference		Sheet	1 of 1
Drawing Number	NHE_127523-2405-COL-SA4-DDR-C-160260	Revision	B01

Sheet Size A1 594 x 841

Published Published Published Published Published Published