

FACE
Scale: 1:10

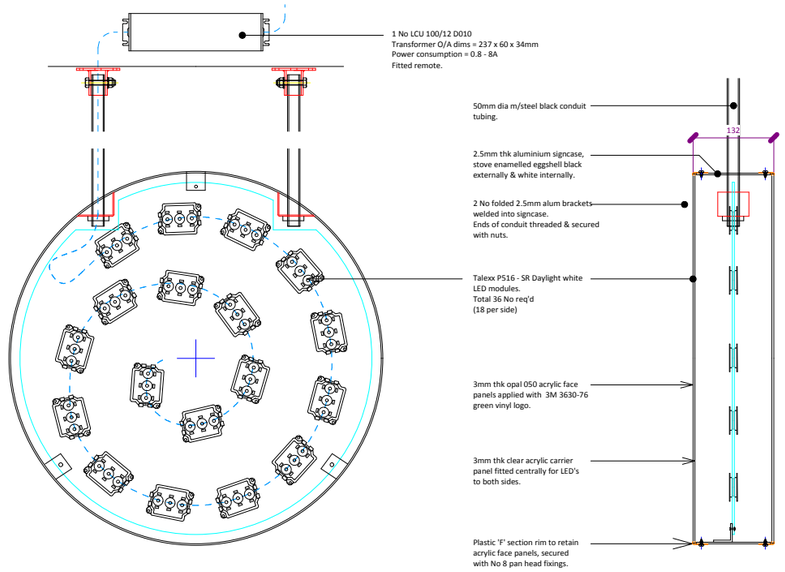

FACE SECTION
Scale: 1:10

SECTION
Scale: 1:10

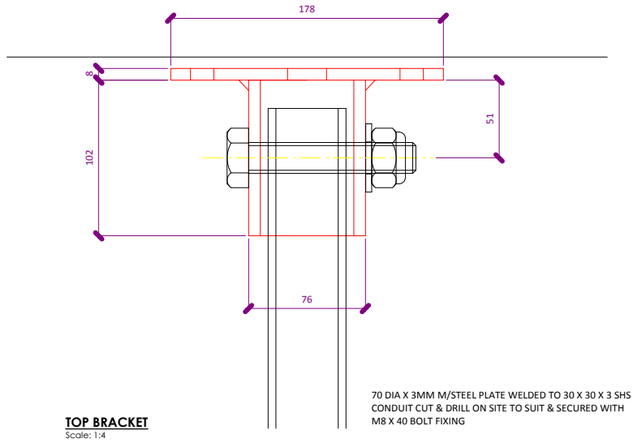

70 DIA X 3MM M/STEEL PLATE WELDED TO 30 X 30 X 3 SHS CONDUIT CUT & DRILL ON SITE TO SUIT & SECURED WITH M8 X 40 BOLT FIXING

TOP BRACKET
Scale: 1:4

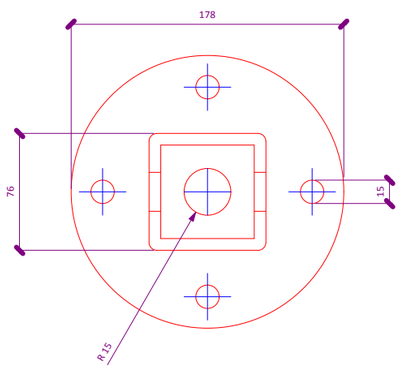

TOP BRACKET PLAN
Scale: 1:4

General Notes:
Do Not Scale from this drawing except for planning purposes.
Contractor to carry out full setting out prior to start of works and notify any discrepencie to the Architect for clarification;
All Works to be strictly in accordance with local authority legislations, and/or similar governing bodies;
All Works to be strictly in accordance with CDM Regulations (Health & Safety);

rev	date	description

Copyright of this drawing is reserved and is issued on condition that it is not reproduced in part or in whole without written consent unless otherwise assigned.

All dimensions to be verified on site by the Contractor prior to commencement of work. Any discrepencies not brought to our immediate attention shall be deemed to be the responsibility of the contractor/fabricator.

ghost
ARCHITECTURE
7 Devonhurst Place
Heathfield Terrace
London
W4 4JD
Phone: +44 (0)20 8742 3330
Fax: +44 (0)20 8742 0744
www.ghostprojects.com

CLIENT:
The University of Manchester

PROJECT:
Starbucks
76 Sackville Street
Manchester
M1 3NL

DRAWING TITLE:
Standard Detail:
Hanging Sign

SCALE:	DRAWN:	CHECKED:
1:4 & 1:10 @A3	MM	BS

DATE:	ISSUE TYPE:
30/07/2013	INFORMATION

DWG NO:	FILENAME:
SIG-01	SIG-01_starbucks_manchester_sackville_st_hanging_sign_detail_300713
	REV: -/-