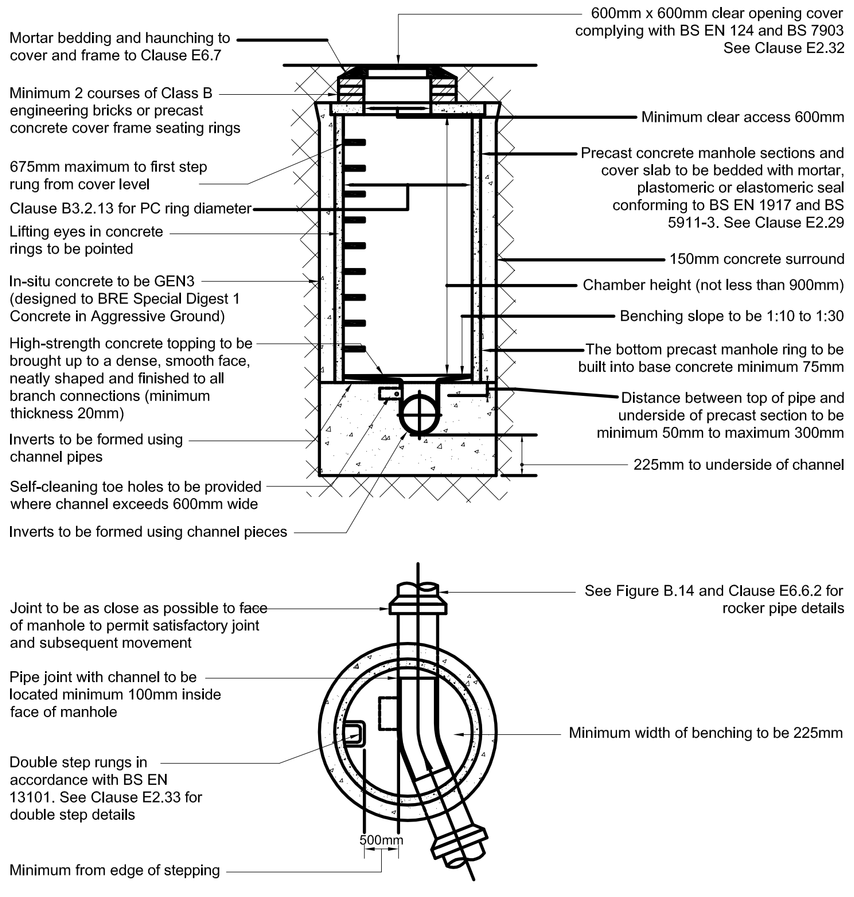

TYPICAL MANHOLE DETAIL - TYPE 2
(Maximum depth from cover to soffit of pipe 3.0 m)

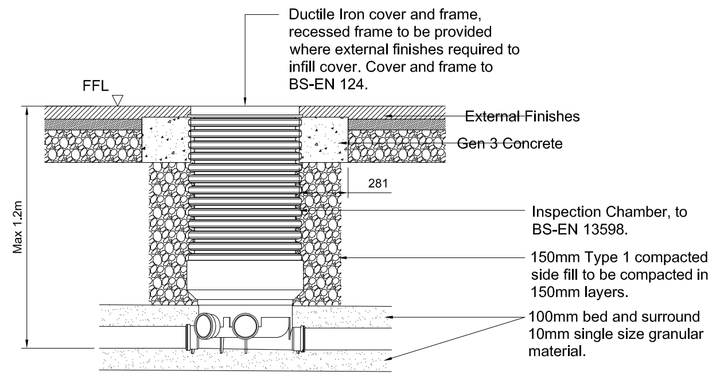

EXTERNAL INSPECTION CHAMBER SECTION

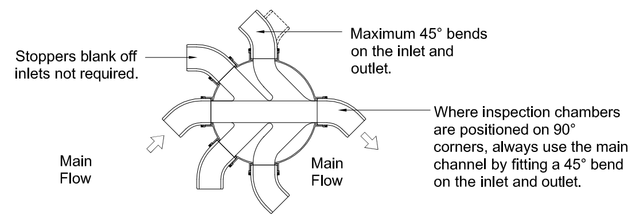

INSPECTION CHAMBER PLAN

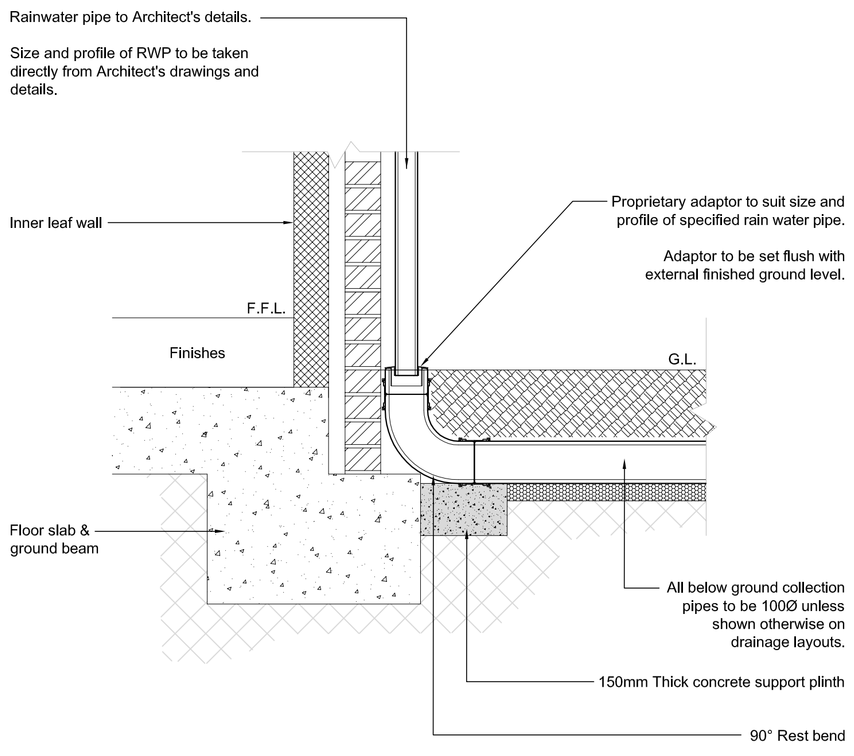

EXTERNAL RAINWATER PIPE CONNECTION DETAIL

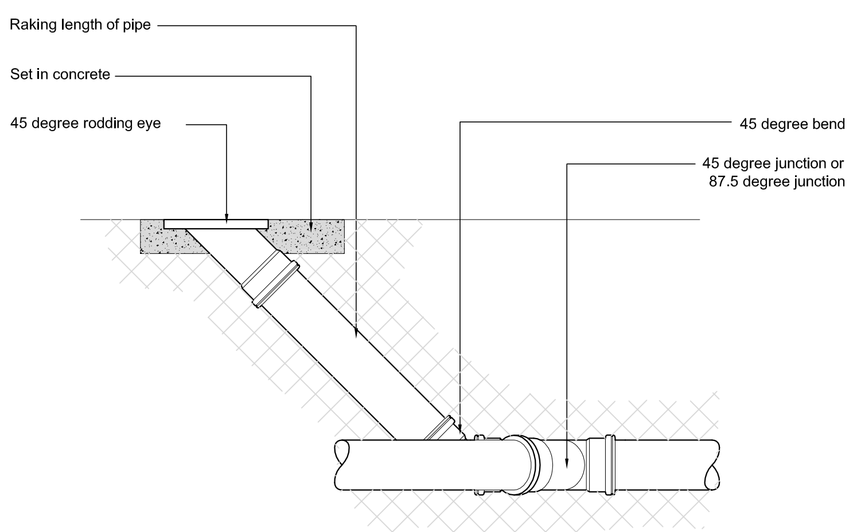

RODDING POINT

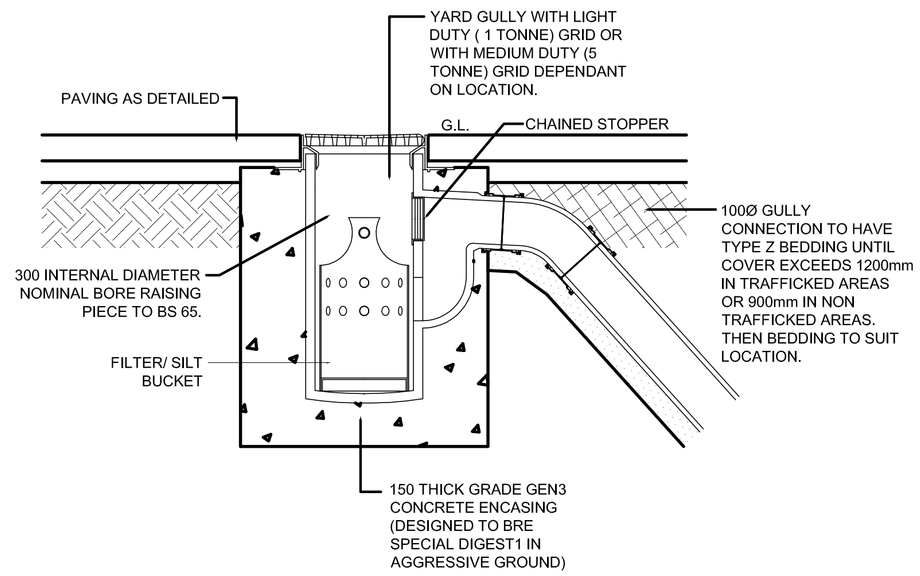

NOTES:

Rev:	Description:	Date:	By:	Chkd:
P01	PRELIMINARY STAGE 3 ISSUE	14.06.16	SK	CG

curtins

Curtins Consulting Ltd,
Merchant Exchange, 17-19 Whitworth St West, Manchester, M1 5WG
t: 0161 236 2394
e: manchester@curtins.com
www.curtins.com

Structures • Civils • Environmental • Infrastructure • Transport Planning • Sustainability • Expert Advisory Services
Birmingham • Bristol • Cardiff • Douglas • Edinburgh • Kendal • Leeds • Liverpool • London • Manchester • Nottingham

Status:
PRELIMINARY

Project:
UNIVERSITY OF MANCHESTER
CHEMISTRY BUILDING - NITROGEN STORE

Drg Title:
DRAINAGE DETAILS

Curtins No.
MA1259

Scale:	Size:	First Issue:	Drawn:	Checked:
1:25	A1	14/06/2016	SK	CG

Drg No:
5376-CUR-02-XX-DR-D-52-70004

Rev:
P01

© This drawing is the copyright of Curtins Consulting Ltd