External Signage

1

Bobby's Convenience golocalextra Community Convenience Store

2

3

soft drinks frozen food milk & dairy news off licence

www.golocalextra.co.uk

4

golocalextra
Bobby's Convenience & Off Licence

5

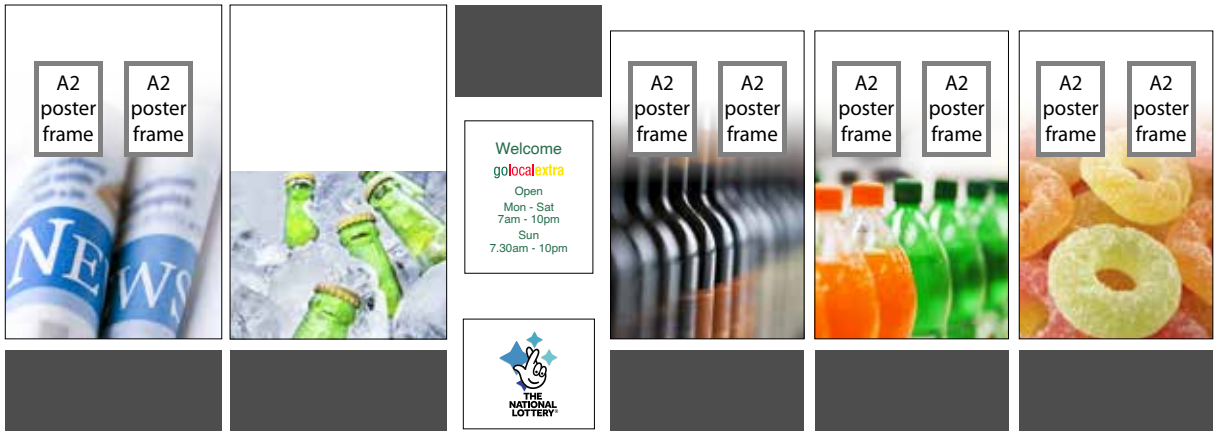

7

chilled soft drinks
frozen
frozen
milk & dairy
chilled beer, wine & cider
wines of the world

6

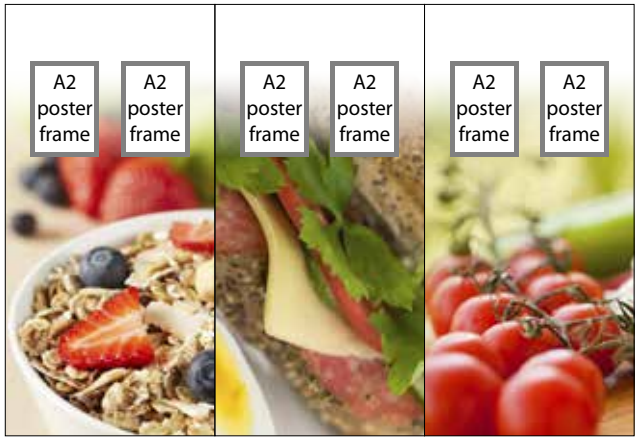

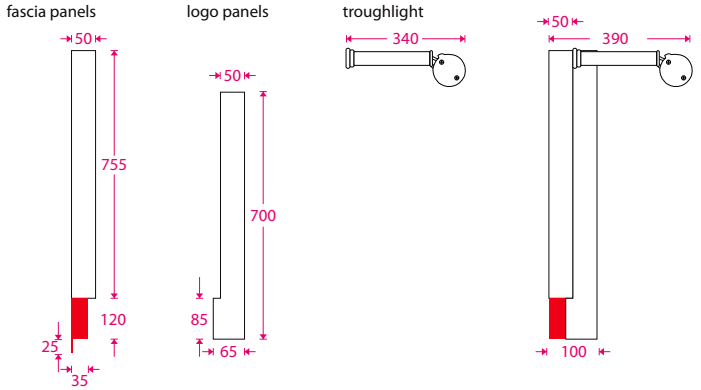

Signage 3380mm above ground level
maximum letter height of signage 400mm
overhead led troughlight 265 candelas per metre

Job No. 6053-002
Customer Parfetts
Contact Adrian Statham
Site Location 186-190 Rochdale Rd
Collyhurst
Manchester
M40 7RA

Date 20/07/16

1. ACM sign tray 12850 x 900
(inc 25mm bottom fixing lip)
C/W feature GLEx pod 2880 x 700 comprising
individual built-up painted metal lettering H400
1No led troughlight fitted to fascia 12850mm
3"x2" timber packing (25met)
external plywood (5 sheets)

2. ACM flat panel 8750 x 350

3. ACM panels with vinyl graphics to shutter box
8500 x 340 & 4200 x 380

4. Lightbox panels
5mm opal acrylic with vinyl graphics
2no. 900 x 1230

5. Window graphics
window graphics fitted externally
A2 external poster frames

6. Image panels
flat composite panels c/w mounted graphics
3no. 1375 x 2830
A2 external poster frames

7. Internal bulkhead letters
5mm laser cut letters with vhb tape to reverse
150mm lower case height

Notes for retailer: to be completed prior to install
A suitable external electrical supply must be provided.
Alarm boxes, CCTV or any other obstructions must be relocated.
Clear access must be available to all windows.
Windows must be clear of existing graphics & cleaned.

Please check all details such as spellings, tel. no. etc carefully
Sign UK cannot accept liability for errors found after
approval has been given

sign UK
your image is our business

External Signage



Job No.	6053-002
Customer	Parfetts
Contact	Adrian Statham
Site Location	186-190 Rochdale Rd Collyhurst Manchester M40 7RA
Date	20/07/16

1. ACM sign tray 12850 x 900
(inc 25mm bottom fixing lip)
C/W feature GLEx pod 2880 x 700 comprising
individual built-up painted metal lettering H400
1No led troughlight fitted to fascia 12850mm
3"x2" timber packing (25met)
external plywood (5 sheets)

2. ACM flat panel 8750 x 350

3. ACM panels with vinyl graphics to shutter box
8500 x 340 & 4200 x 380

4. Lightbox panels
5mm opal acrylic with vinyl graphics
2no. 900 x 1230

5. Window graphics
window graphics fitted externally
A2 external poster frames

6. Image panels
flat composite panels c/w mounted graphics
3no. 1375 x 2830
A2 external poster frames

7. Internal bulkhead letters
5mm laser cut letters with vhb tape to reverse
150mm lower case height

Notes for retailer: to be completed prior to install
A suitable external electrical supply must be provided.
Alarm boxes, CCTV or any other obstructions must be relocated.
Clear access must be available to all windows.
Windows must be clear of existing graphics & cleaned.

Please check all details such as spellings, tel. no. etc carefully
Sign UK cannot accept liability for errors found after
approval has been given

sign UK
your image is our business