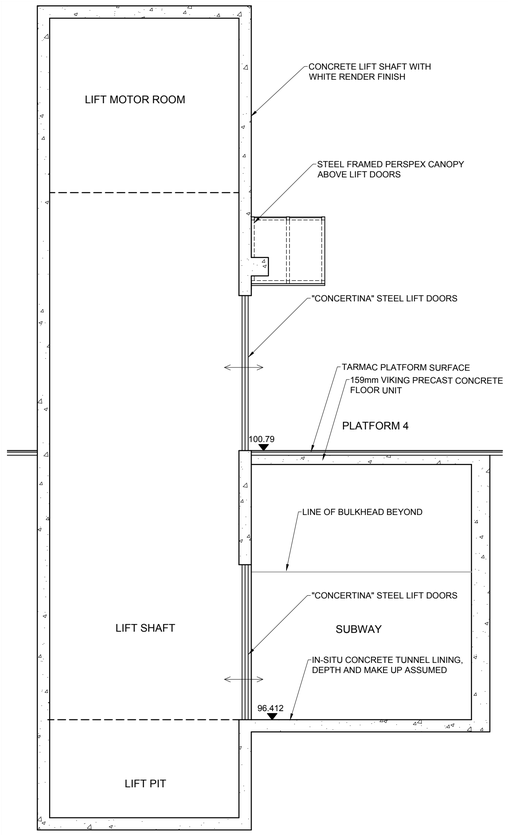

EXISTING SECTION A-A

SCALE 1:50

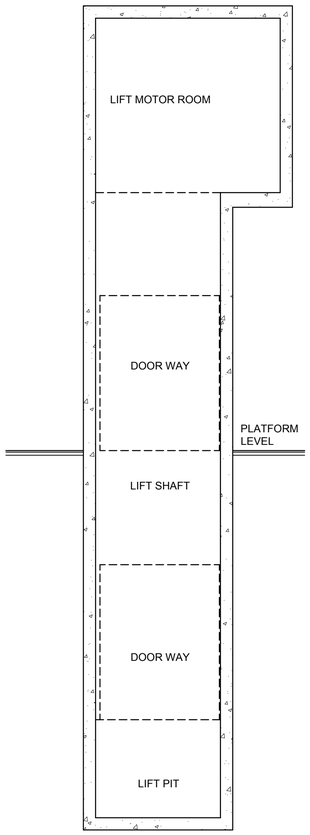

TYPICAL SHAFT SECTION B-B

SCALE 1:50

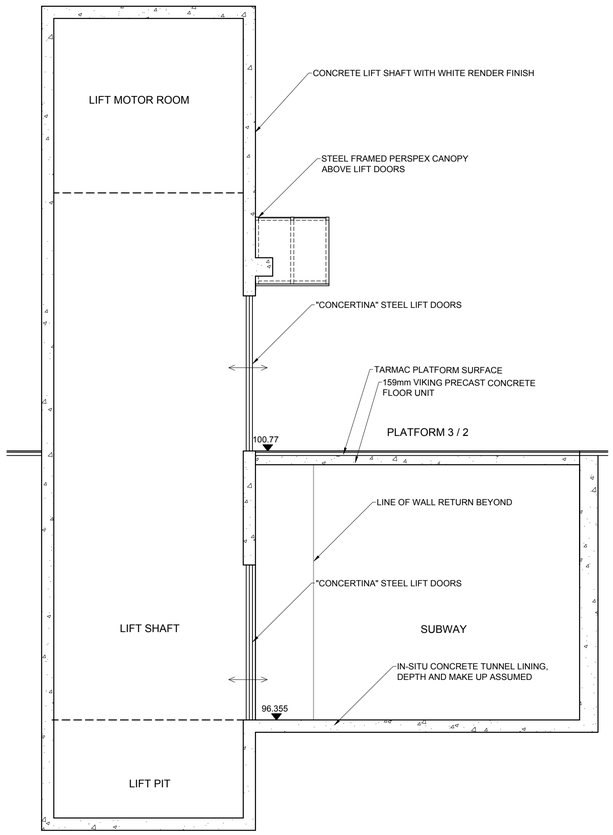

EXISTING SECTION C-C

SCALE 1:50

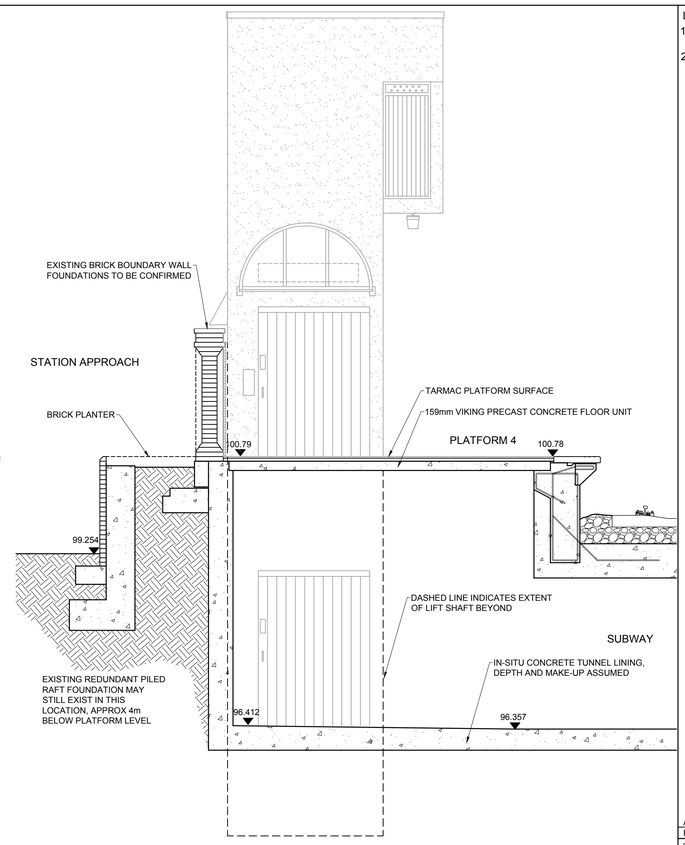

EXISTING SECTION D-D

SCALE 1:50

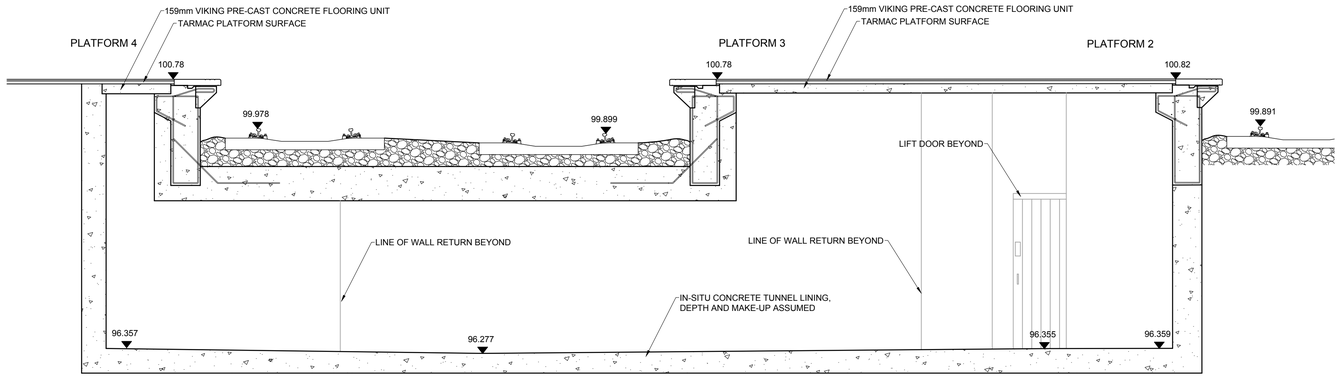

EXISTING SECTION E-E

SCALE 1:50

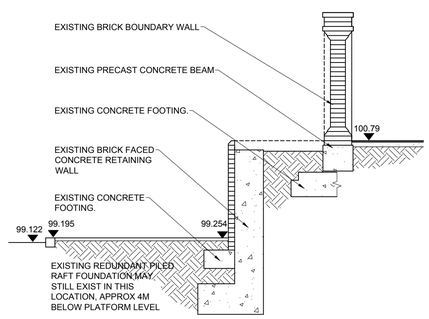

EXISTING SECTION W-W

SCALE 1:50

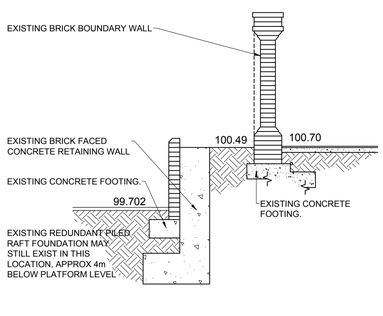

EXISTING SECTION X-X

SCALE 1:50

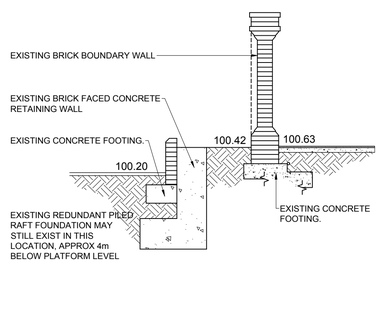

EXISTING SECTION Y-Y

SCALE 1:50

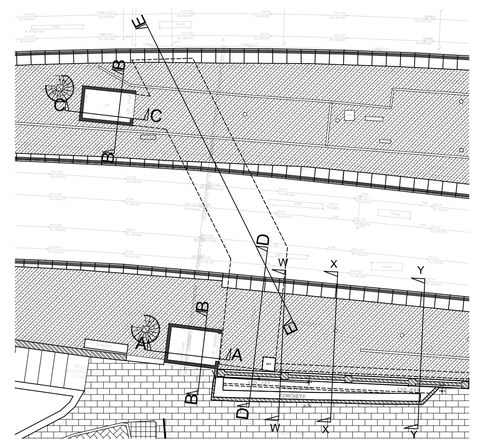

SECTION LOCATION PLAN

SCALE 1:200

LEGEND/NOTES

1. ALL DIMENSIONS IN MILLIMETRES UNLESS NOTED OTHERWISE.
2. THIS DRAWING IS TO BE READ IN CONJUNCTION WITH THE FOLLOWING DOCUMENTS:-

DOCUMENTS

BDG0105-DOC-FORM A	FORM A DOCUMENT

DRAWINGS

BDG0105-DRG-A001	EXISTING GENERAL ARRANGEMENT
BDG0105-DRG-A002	EXISTING SECTIONS
BDG0105-DRG-A003	EXISTING ELEVATIONS
BDG0105-DRG-A004	PROPOSED GENERAL ARRANGEMENT
BDG0105-DRG-A005	PROPOSED SECTIONS AND ELEVATIONS 1 OF 2
BDG0105-DRG-A006	PROPOSED SECTIONS AND ELEVATIONS 2 OF 2
BDG0105-DRG-A007	SUMMARY OF PROPOSED WORKS

0 4 8 12 16 20m
SCALE 1:200

0 2 4 6 8 10m
SCALE 1:100

0 1 2 3 4 5m
SCALE 1:50

REV	DATE	DESCRIPTION OF REVISIONS	DRAWN	CHK'D	APP'R'D
A01	07.09.2012	FORM A - A.I.P.	CJT	CK	CK
P01	05.09.2012	ISSUED FOR IDC	CJT	CK	CK

SAFETY HEALTH AND ENVIRONMENTAL INFORMATION

THE HAZARDS AND RISKS ASSOCIATED WITH THE WORKS SHOWN ON THIS DRAWING AND DESCRIBED IN THE SCHEDULE OF WORKS ARE CONSIDERED TO BE WITHIN THE REASONABLE, NORMAL AND ACCEPTABLE LIMITS FOR GENERAL BUILDING AND MAINTENANCE WORKS. PLEASE REFER TO DESIGNER RISK ASSESSMENT

DOCUMENT REF: BDG0105/DRA

STATUS

FORM A APPROVAL IN PRINCIPLE

NetworkRail

DESIGNERS

Infrastructure Projects
Buildings & Civils
Building Design Group
York
Hudson House
Toft Green
York
YO1 6HP
Tel: 01904 383256

NetworkRail

PROJECT: BDG0105

MANCHESTER OXFORD ROAD STATION LIFT AND SUBWAY RECOMMISSIONING

DRAWING TITLE

EXISTING SUBWAY SECTIONS

DESIGNED	C TEARE	SIGNED	DATE 07.09.2012
DRAWN	C TEARE	SIGNED	DATE 07.09.2012
CHECKED	C KELLY	SIGNED	DATE 07.09.2012
APPROVED	C KELLY	SIGNED	DATE 07.09.2012

SCALE(S) AT A1 SHEET SIZE 841 X 594: AS SHOWN

ELR & MILEAGE: COL 189m 330yds

ALTERNATIVE REFERENCE

DRAWING NUMBER: BDG0105/DRG/A002

REVISION: A01