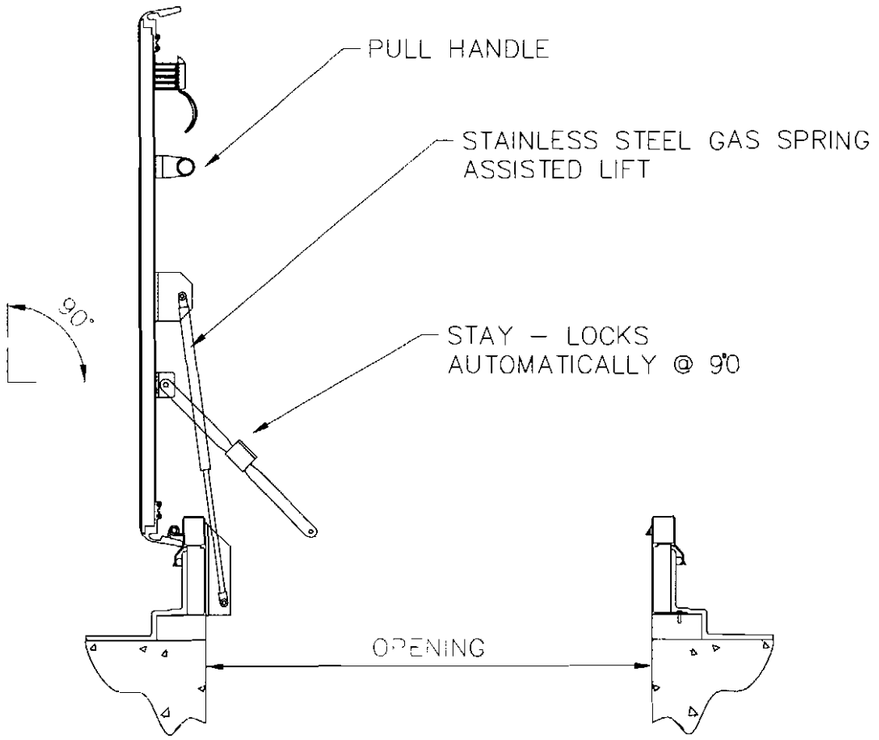

SRH50 = U value 0.43 W/m²K
Overall dimension are different

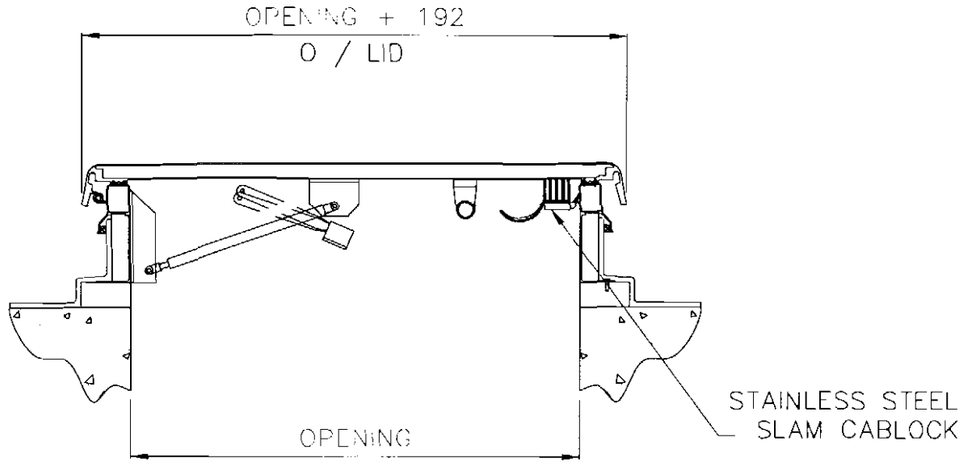

OPEN / CLOSE INSIDE ONLY

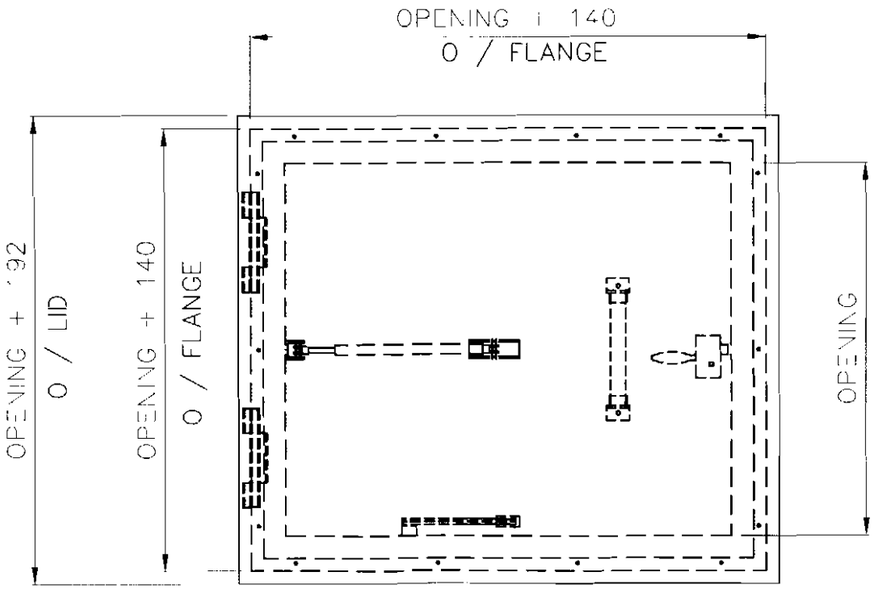

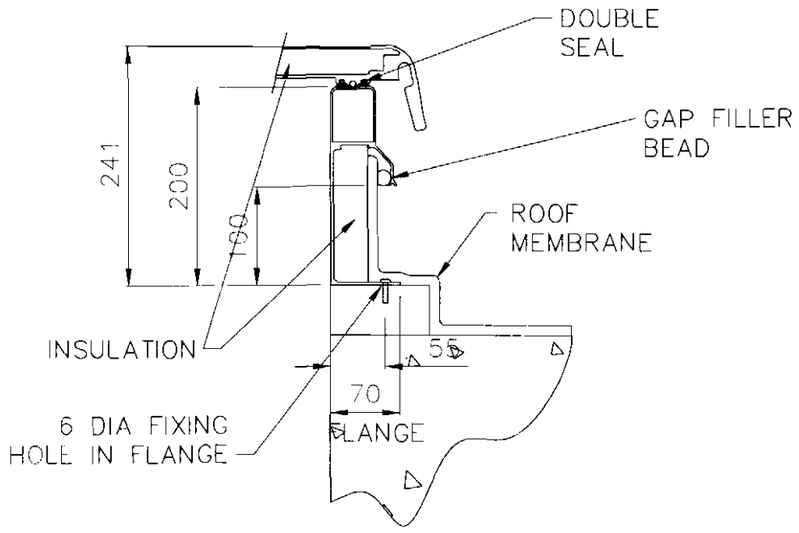

projects

Notes

Locking mechanism:
Cab lock with external locking handle, European deadlock with key and opening from both sides as detailed in specification clause L20 / 52A.

Rev	Date	Revision notes	By	Check
		Listed Development Control Consent	06.06.08	DJH
		Purpose of Issue	Rev	Date	Authorised

projects
Jackson House
Sibson Road
Sale
Manchester
M33 7RR
Tel 0161 973 7410
Fax 0161 973 6190
Additional offices in Birmingham, Leeds, Liverpool and Newcastle
www.aajprojects.co.uk

Client: Manchester Metropolitan University, Lower Ormond Street, Manchester, M15 8BX	Drawing Title: As Proposed Roof Access Hatch Detail
Project Title: Righton Building, Cavendish Street, Manchester, M15 6BG	Drawn: MA; Date: 06/05/2008; Checked: DJH; Date: 06/05/2008
AWC No: 1025/015	Scale: NTS; Revision: -

A3