0.9m HIGH CLOSE-BOARDED FENCE PANELS.

Frame: 125 x 30 top rail; 150 x 30 bottom rail; 100 x 30 diagonal bracing.

Facing: 100 x 25mm pales @105 mm centres with 28 x 55 saddle-back timber capping.

Fixings: Boards fixed to rails with 2No. 63mm long galvanised annular ring nails per station. Panels fixed to posts with 4No. 100mm long M8 stainless steel screws, drilled and plugged on the skew through the frame, board and minimum 50mm into post per panel. Capping fixed to top rail with 100mm long galvanised annular ring nails at 300mm centres. 4No anti temper fixing to post/panel.

0.9m HIGH CLOSE-BOARDED FRAMED, LEDGED AND BRACED TIMBER GATE.
960mm minimum clearing.

Frame: 125 x 30 top rail; 150 x 30 bottom rail; 125 x 30 vertical rail, 100 x 30 diagonal bracing.

Facing: 100 x 25mm pales @105 mm centres with 28 x 55 saddle-back timber capping.

Fixings: Boards fixed to rails with 2No. 63mm long galvanised annular ring nails per station. 2No.Galvanised 30" hook & band hinge fixed to timber spacer on concrete post , 1No Galvanized 125mm Ring Latch & Handle.
Capping fixed to top rail with 100mm long galvanised annular ring nails at 300mm centres.

Plan

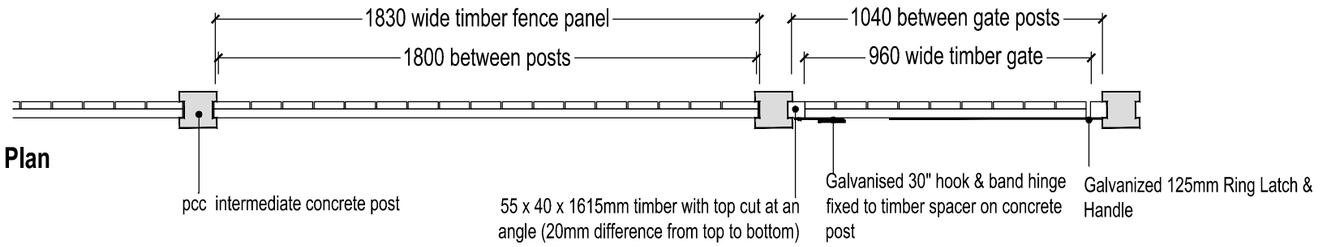

Section

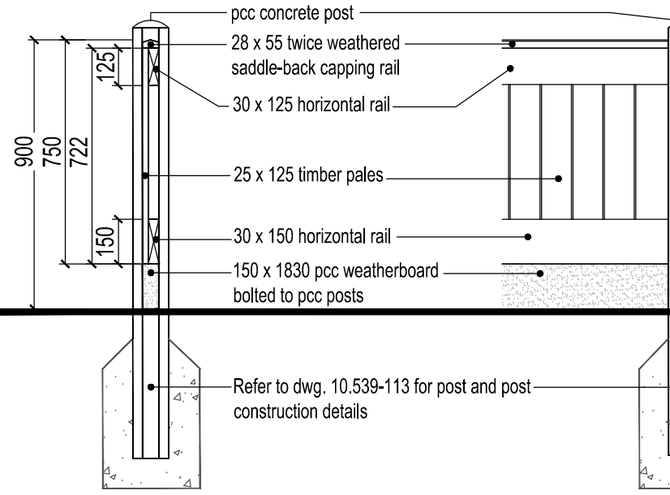

Rear Elevation

N.B. new fence alignment to match existing as much as possible. Layout to be discussed with residents especially if existing layout is disputed. Fences to be erected on the legal boundary between the two adjacent properties, especially where the adjacent property is owner occupied. Fence lines generally to run 90 degrees out from adjacent building elevations. Alignment of 'fair face' i.e. the face without view of the framing and bracing to be equally shared between properties in a run such that each house has one 'fair faced' side.

TIMBER TREATMENT
All timber CCA treated softwood (tannalised), reasonably free from splits, shakes, knots etc. Generally to be B.S. 1722:part 5:1999, preservatives to B.S. 4072 and B.S.5589: 1989.

SURFACE FINISH NOTES
All new boundaries to be painted to tenant's choice. Surface finishes to be by **Jotun / Dulux** or similar approved.

- New timber to have 1 coat **Jotun Butinox 3 Opaque** thinned by 10% prior to application of full finish coat.
- New and existing timber to have 1 coat **Jotun Butinox 3 Opaque** stain
- Metal surfaces to be coated with **Dulux Metalshield primer** and 2 coats **Dulux Metalshield gloss.**

NOTE:
FENCE HEIGHT AS SHOWN. ALL TIMBER AND POST DIMENSIONS ARE INDICATIVE. ALL REFURBISHMENT WORKS TO MATCH EXISTING. TO BE CHECKED ON SITE AND CONFIRMED WITH CA.

PLANNING

Client	CITY SOUTH MANCHESTER	Scale 1:20	Drawn HR	Checked MO'C	Date 01.11.2011
Job title	ENVIRONMENTAL IMPROVEMENT WORKS	Job number 10.539	Drawing number 0-124		Rev
Drawing title	BOUNDARY D900 CLOSEBOARD - TIMBER FENCE & GATE				

All drawings to be read in conjunction with the Landscape NBS Specification and all works to be carried out in accordance with latest British Standards/codes of practice unless specifically directed otherwise.
Discrepancies and/or ambiguities between this drawing and information given elsewhere must be reported immediately to this office for clarification before proceeding.

19 OLD HALL STREET
LIVERPOOL
L3 9JQ
TELEPHONE +44 (0)151 242 6161
FACSIMILE +44 (0)151 236 4467
EMAIL office@bcalandscape.co.uk
WEB SITE www.bcalandscape.co.uk

BCA Landscape