NOTES
The Contractor is to check all dimensions and conditions on site before commencing. Do not scale from this drawing.
This drawing remains the copyright of POZZONI LLP.

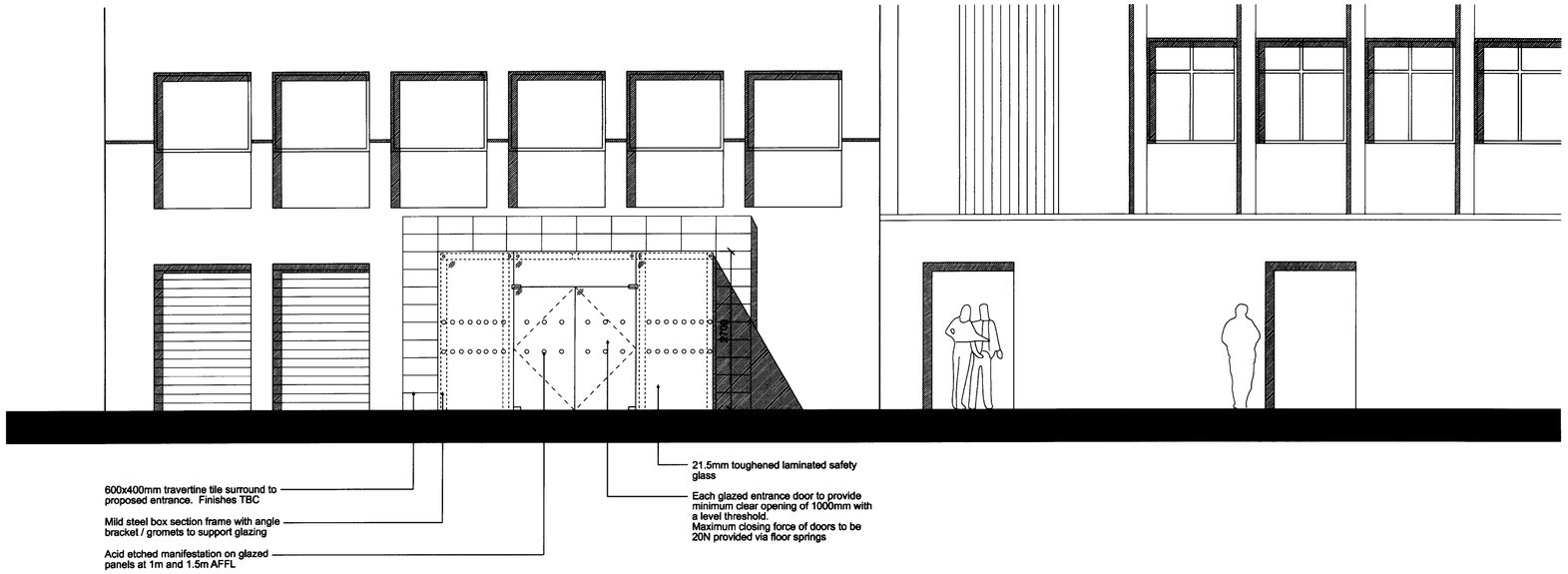

Proposed Entrance Front Elevation 1:50

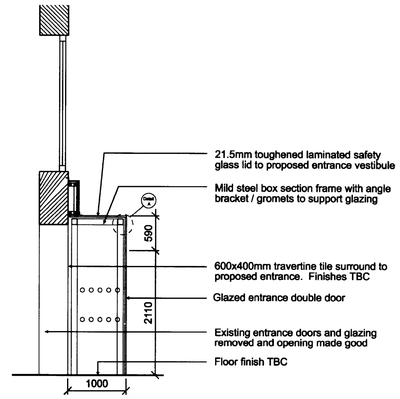

Proposed Entrance Section A-A 1:50

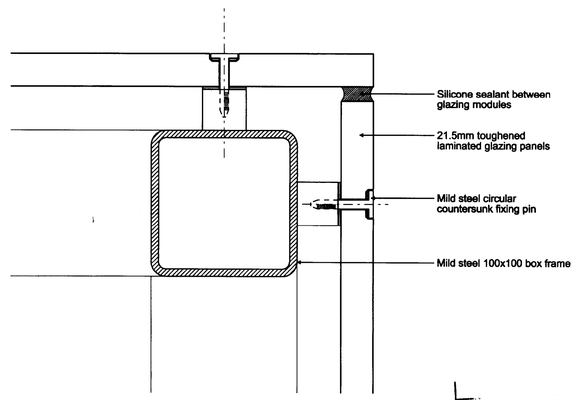

Detail A
Typical glazed / frame fixing: 1:2

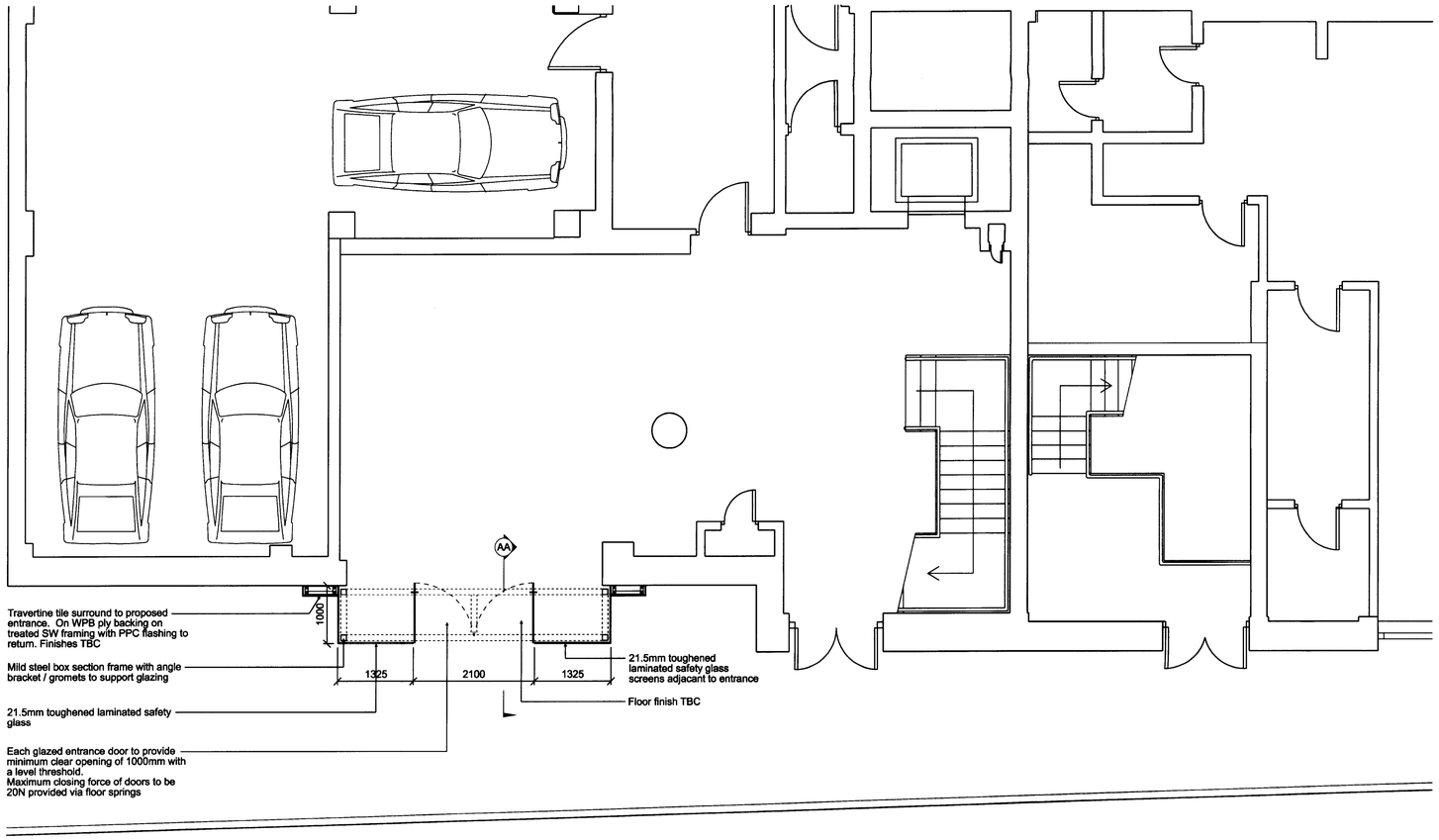

Proposed Entrance Plan 1:50

Note:

Proposed entrance to meet all current Building Regulations and DFA2 requirements.

All dimensions are subject to full site survey.

Details of glazing to be confirmed by manufacturer.

Area created by proposed entrance vestibule:

4.59sqm / 49.4sqft

ACK'D
REPLIED
17 NOV 2008
NO REC'D | DATE

REV C - SURROUND DETAILS REVISED - SCM 11.11.08
REV B - ENTRANCE PROPOSALS REVISED TO SUIT CLIENT COMMENTS - MKM 04.11.08
REV A - ENTRANCE FEATURE PROJECTION REVISED TO 1M - SCM 31.10.08

Revision	By	Date

Client
Morley Pension Fund

Job
St Johns House
Queen St manchester

Drawing
Proposed Entrance
Plans & Elevations

- [x] Feasibility
- [ ] Design
- [ ] Tender
- [ ] Contract
- [ ] Construction
- [ ] As Built

Scale	Varies	@A1
Drawn	MKM	
Date	Oct 08	Rev
Drg. No.	P2709-200	C

POZZONI

T 0161 928 7848
F 0161 928 9428
E architects@pozzoni.co.uk
2 Woodville Road
Altrincham
WA14 2FH