96 SHEET BACKLIGHT

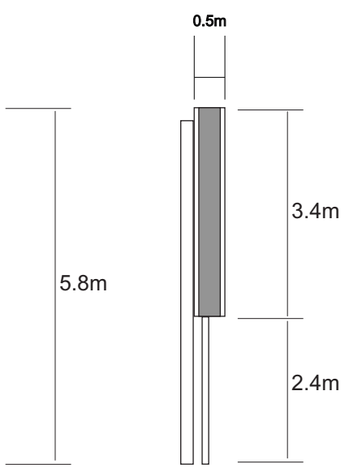

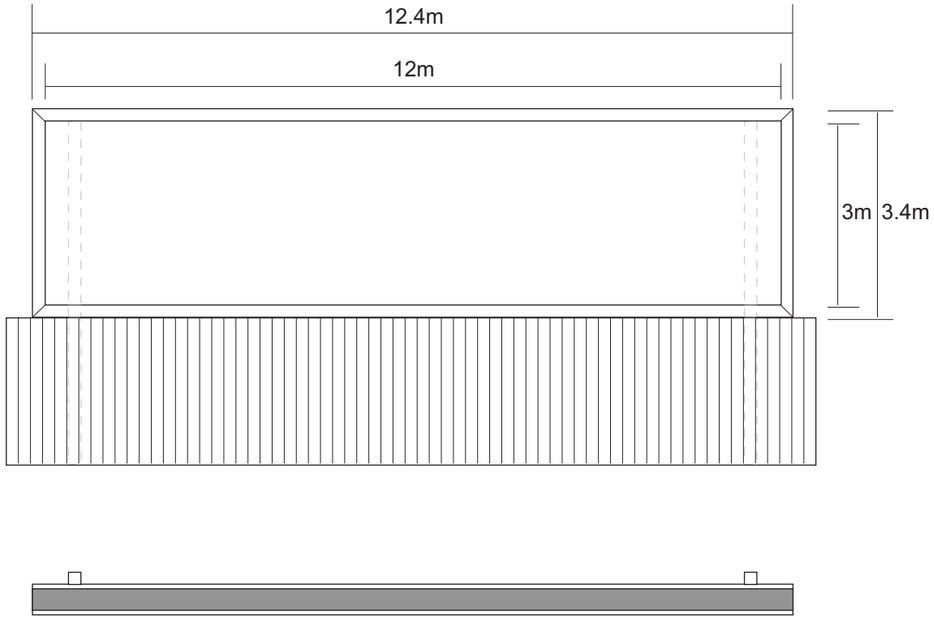

Scale 1:100

Rev No.	Date	Desc.

CLIENT: OCEAN	JOB No/ Desc.: Rajan NCP Land fronting New Bridge Street between Cross Street and Dutton Street, Manchester, M3	
	Drawing Desc.: 96 SHEET BACKLIGHT DETAILS	Date : 10/08 Scale 1/100
		Drawing No.: RNCP:02