Design and Access Statement

Planning portal ref 02352629

Planning application for a hand car wash and valeting centre in the car park of Tesco Baguley

28 December 2012

Waves™

© Waves Consultancy Ltd

Overview

Waves Consultancy Ltd proposes installing a dedicated wash and valeting area, operating from 9 car parking spaces, as shown on pages 3-6.

Waves Consultancy Ltd has identified a business opportunity within the car park of Tesco, Altrincham Road, Baguley, Manchester, Greater Manchester, M23 9TJ and having gained consent from the car park owners, we are applying for planning permission to provide an efficient and compliant car wash operation.

Design: Our proposal involves the erection of a canopy and the stationing of an office. The proposal is functional in its design and we do not believe it will be visually obtrusive due to it's very limited size and height.

Transportation: The proposed location has been selected after consideration was given to the provision of services (water, power and drainage) and a position that would minimise any impact on the customers wishing to visit the Store.

The proposed layout is positioned to permit safe access across the car park for customers who can use the existing designated pedestrian walkways for access to the Store. We believe that the car park has adequate capacity for this proposal, even at the busiest time of the year. We do not believe the proposed car wash will affect the egress/ingress routes of the car park and we do not think there will be any impact on local transport.

Retail Issues: Waves believes that the introduction of the car wash will create new and sustainable economic growth in the area; it will have a positive impact on local employment creating an estimated four full-time and four part-time jobs. The car wash will also provide increased consumer choice with the addition of the service.

The service will operate from nine car parking spaces; we believe that the proposed use is ancillary to the retail use of the site. It is likely that the facility will be used in association with any trip to the supermarket rather than resulting in a purpose built trip; on our existing hand car wash sites (on average) approximately 95% of our customer base use the Store, therefore we believe there will be no significant increase in traffic or car park usage associated with the car wash.

Although the car wash operates from nine parking spaces, we can wash and valet 5-6 vehicles at any one time, therefore the net loss of spaces is only 3-4.

The design allows for both ambulant and disabled customers to either remain in their vehicle whilst it is washed (following which they will then park their car closer to the Store to go shopping) or they can leave the vehicle with the operatives and collect upon completing their visit to the Store.

© Waves Consultancy Ltd

Residential Amenity: We do not believe that there will be a material increase in noise and disturbance from the site because of the existing use of the site. The proposed hours of operation reflect the standard operating hours of a retail outlet.

All equipment used on our car wash will emit very low levels of noise and the jet washes are housed within the office to minimise any noise. Please see also attached noise survey showing the readings from the proposed equipment.

If there are any specific concerns relating to local residential dwellings then we can commission a site specific noise survey but this can take 3-4 weeks to produce (subject to weather conditions).

Environmental Compliance: Every care is taken with the installation of a Waves car wash to ensure that the site is fully compliant with the EA's PPG13 guidelines. The wet wash area is built to a very high specification and we will install an impermeable concrete wash pad with centralised drain, silt trap and interceptor – please see page 4 for more information.

The car wash operation will be environmentally friendly. A water-recycling unit will be provided within the office, recycling oil free wash-water and saving up to 85% of fresh water (please see page 3). We will only use biodegradable detergents on our car wash.





© Waves Consultancy Ltd

Operational layout

Waves proposes operating from 9 car park spaces as per the layout below (for location within the car park please refer to plan 02352629 – Waves hand car wash – 1.1250 location):

Waves Consultancy Ltd proposes installing a dedicated wash and valeting area as shown below.

- Waves will install a concrete wash pad complete with EA compliant drainage and a **water recycling unit** (p.4)
- The site **portable office** is of metal construction (p.5)
- The **canopy** is a cantilever design, with a pre constraint PVC cover (p.6)
- The **jet wash** and **vacuum** specifications are designed to keep noise levels to a minimum
- The **signage** designs and specifications are detailed on p. 7-9

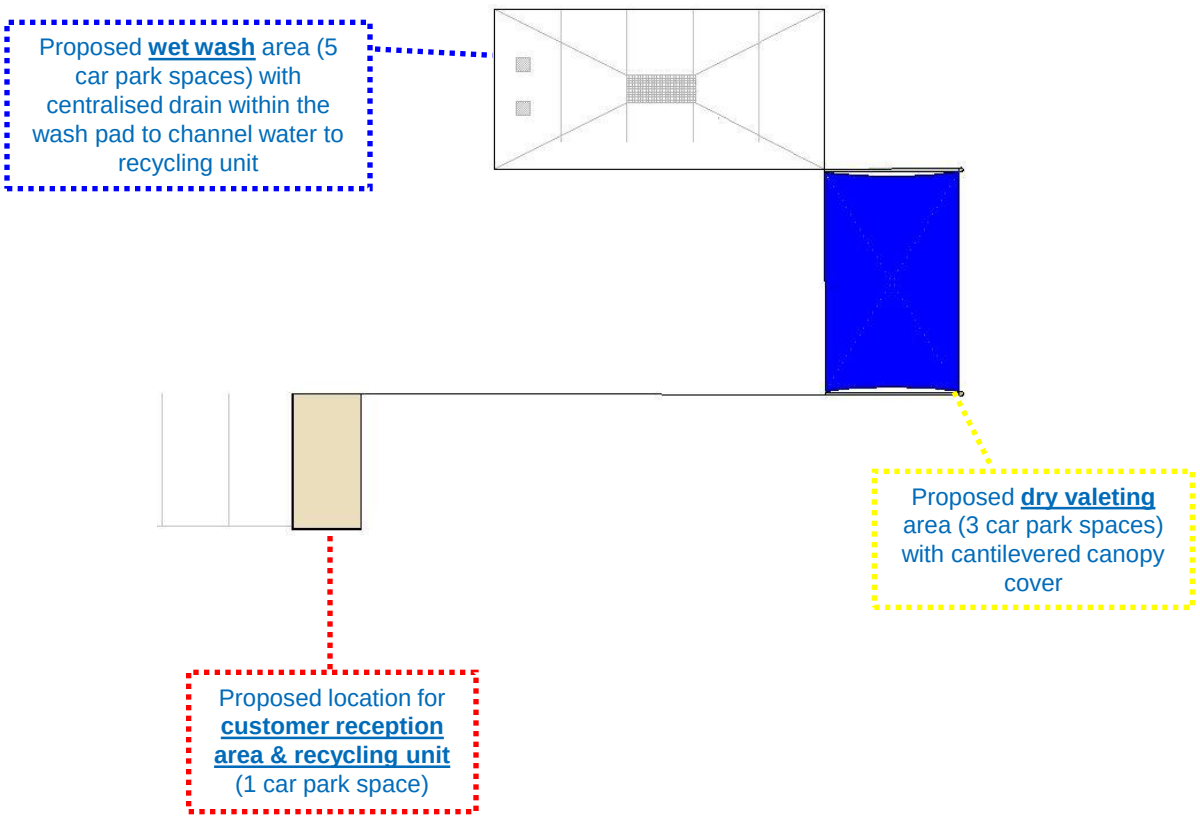

© Waves Consultancy Ltd

Wet wash area with concrete wash pad

Proposed works to wet wash and dry valeting areas

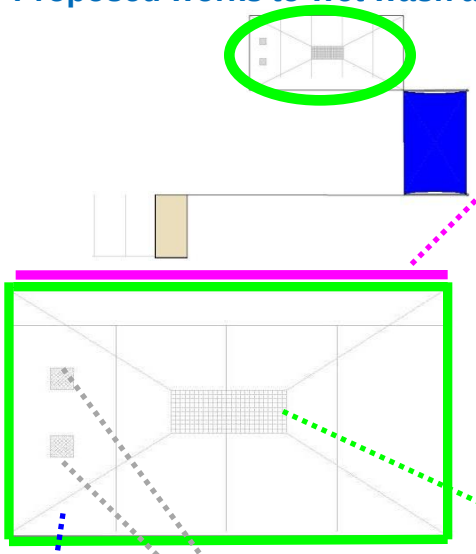

Screening approx. 2m high will be installed to protect customers from spray outside wet area. Screening will be foamex with a steel frame (please see picture below). The screening will be branded to advertise the car wash.



Waves will install a water source to the wet area

Water passes from the silt trap through a two stage interceptor before being filtered to the recycling system in the cabin

Installation of an impermeable concrete wash pad and drainage in the wet area so that waste water will be channelled to a centralised drain with silt trap

Water recycling unit and concrete wash pad

The Waves car wash operation will be an environmentally friendly operation. Waves proposes the installation of a (Working Water) recycling unit within the operating area (recycling plant will be housed within the cabin) – please see Appendix 1 for full specification.

Every care is taken with the installation of a Waves car wash to ensure that the site is fully compliant with the EA's PPG13 guidelines. The wet wash area is built to a very high specification and we install a concrete wash pad with centralised drain, silt trap and interceptor.

The concrete wash pad covers five car parking bays and is divided into four areas to give the bow tie effect. The wash pad is slightly larger than the work area and is graded to ensure that all run off and spray is captured and directed into the silt trap located centrally.

We also install a 2000 litre two (chamber) interceptor and silt separator to ensure that trade effluent discharge is minimal. The concrete is impermeable and water cannot get into the surface water or groundwater system; only into our drainage system which is connected to the foul sewer. The collection tank will be sludge gulped as required by a licensed contractor and the waste disposed of as per EA guidelines.

We can operate a closed loop system however the treated water must be emptied and refreshed regularly to prevent stagnation – hence the requirement for a connection to the foul sewer. Please see appendix 2 for further information on our drainage installation.

© Waves Consultancy Ltd

Cabin design

Proposed cabin desig

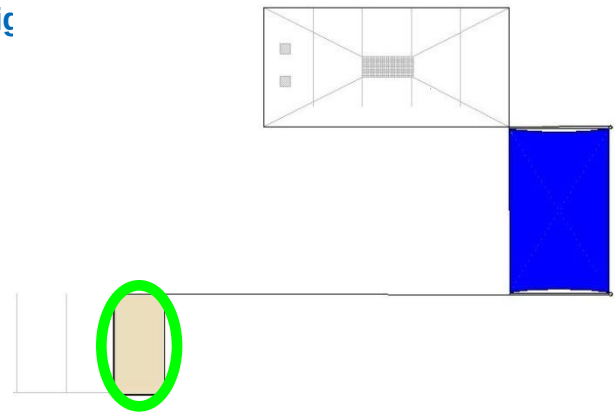

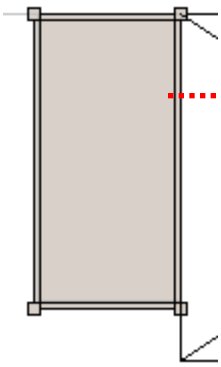

Steel office (16’ x 8’) unit, painted RAL10-B-19 Metal Satin Finish “Mushroom” and clad with larch timber around the top (up to 1m high) example as shown right. Partitioned internally with one side a customer reception and the other side for storage of detergents and to house the green recycling plant.



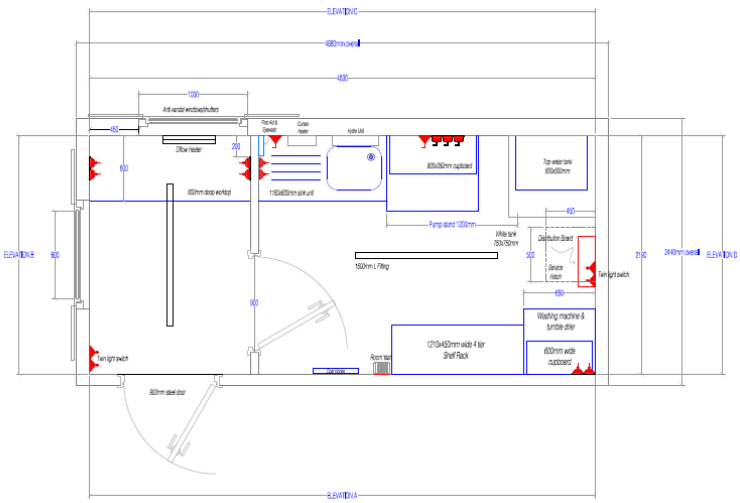

GENERAL WORKS

- Power to reception
- Water source to reception
- Signage to include mandatory health & safety, car wash menu and adverts for the service
- 1 x 70 watt polycarbonate floodlight installed on the top of a pole at each end of the screens

© Waves Consultancy Ltd

Dry valeting area and canopy

Proposed works to dry valeting area

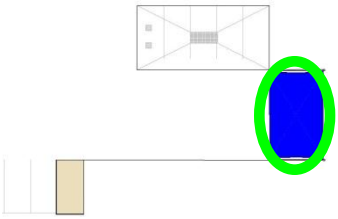

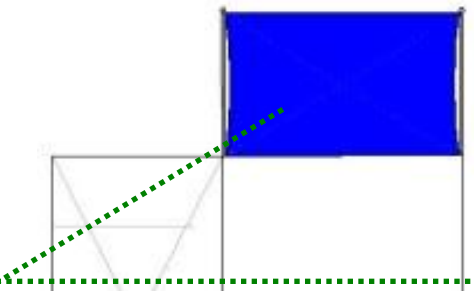

Installation of a two legged cantilevered canopy (blue PVC) over the dry valeting area, covering approximately three car park spaces, as per the detailed specification below. 4 x 70 watt polycarbonate floodlights installed under the canopy skin directed over the dry area

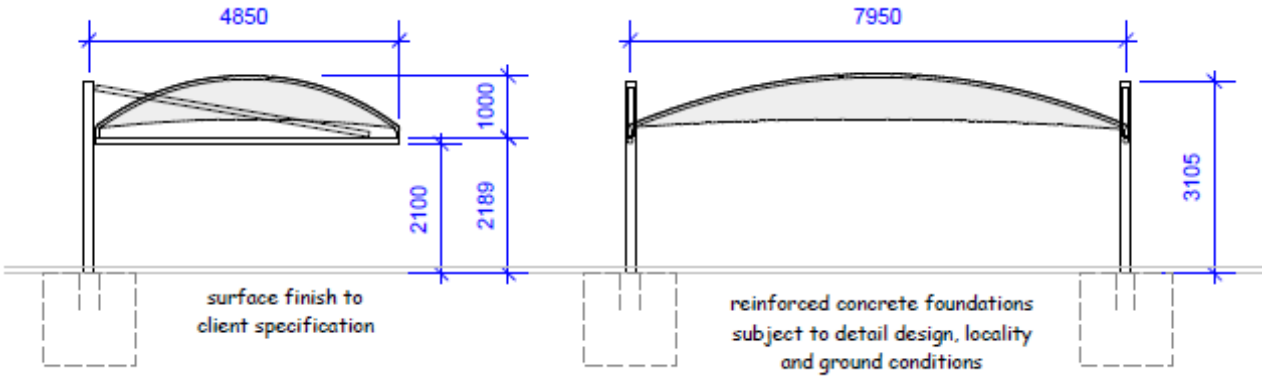

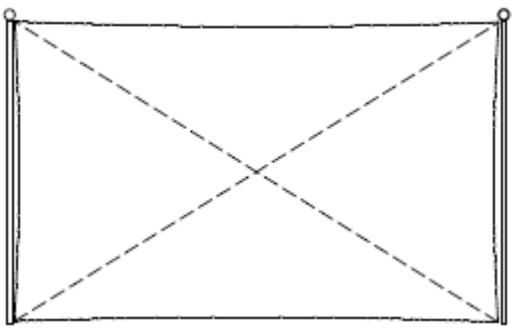

Tensile Characteristics of Fabric	
Base Fabric	Polyester HT1100 DTex
Coating	PVC
Finish	Biface
Fire Rating	M2 NFP 92.503/DIN 4102 B1/BS 5438
Colour Reference	5007 - Silver/Grey



All units on
168mm dia. Galvanised Steel Support Posts
&
89mm dia. Galvanised Steel horizontal side/inclined brace members
&
60mm dia. Galvanised Steel Roof Arches

Connection plates and bolts to manufacturer's details

carapax

© Waves Consultancy Ltd

Signage

Waves has applied for advertisement consent. Designs and specifications are below; for location within the operating area please refer to plan 02352629– Scaled drawings of signage and elevations

Advertisement 1 **Landscape menu below window**

2000mm wide x 1000mm high – 5mm foamex

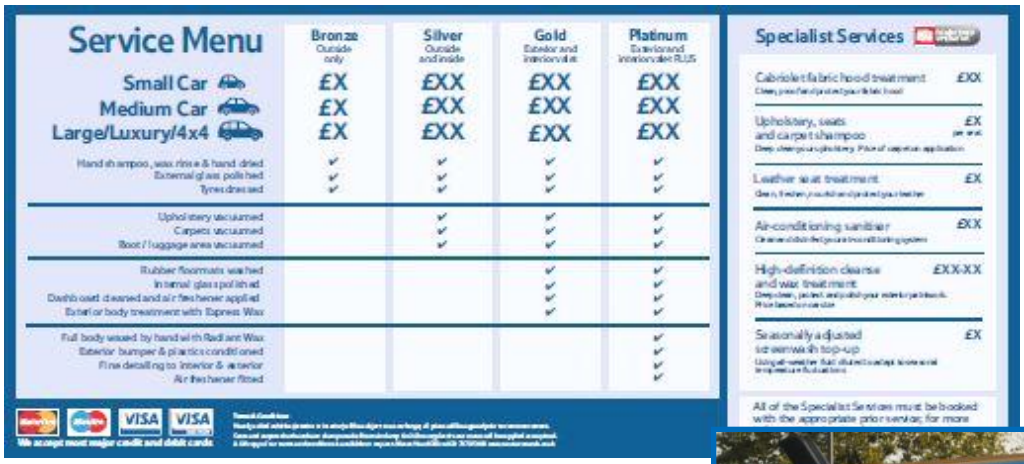



Advertisement 2 and 3 **Welcome sign**

1500mm wide x 350mm high – 5mm foamex



© Waves Consultancy Ltd

Signage

Advertisement 4 **Opening hours**

1200mm wide x 1000mm high – 5mm foamex



Advertisement 5 **Menu sign on cabin door**

800mm wide x 1000mm high – 5mm foamex



© Waves Consultancy Ltd

Signage

Advertisements 6, 10, 11, 15

Screen sign - Design 1

2000mm wide x 2000mm high – Foamex panel

Advertisements 7, 9, 12, 14

Screen sign - Design 2

2000mm wide x 2000mm high – Foamex panel

Advertisement 8, 13

Screen sign - Design 3

2000mm wide x 2000mm high – Foamex panel



Design 1



Design 2

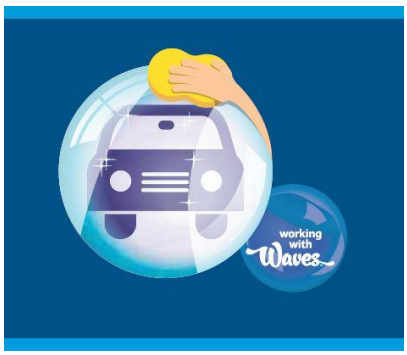

Design 3

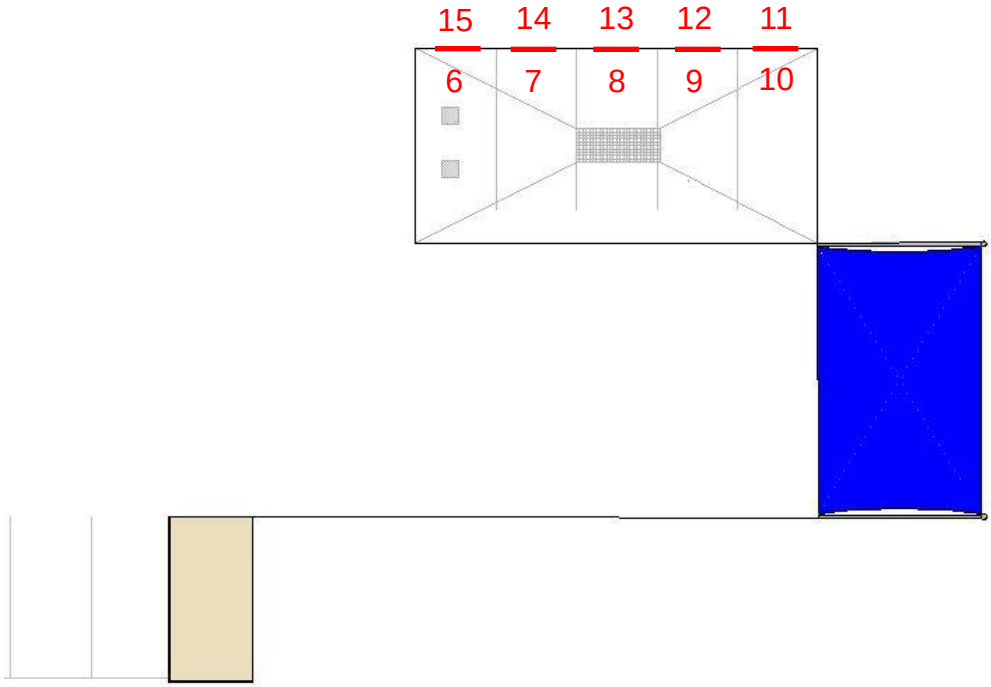

© Waves Consultancy Ltd

If you require any further information, please do not hesitate to contact us:

Waves Consultancy Limited

4 College Mews

212 St Ann's Hill

London

SW18 2SJ

Tel. 020 8877 3884

Fax. 020 8874 2297

Email. info@wavesconsultancy.co.uk

Waves™

© Waves Consultancy Ltd