Lounge Bay

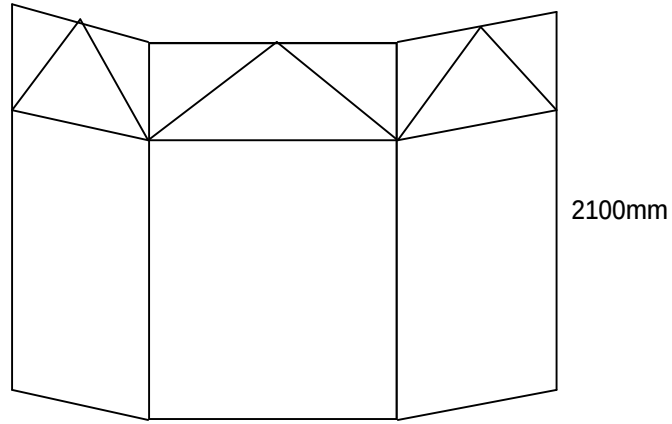


Lounge

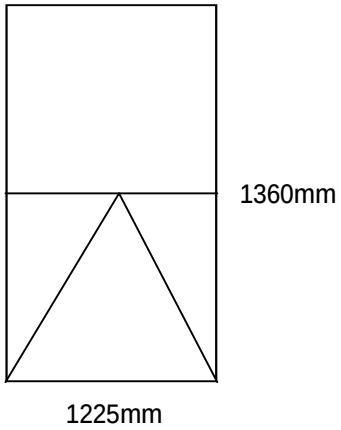


Kitchen Side

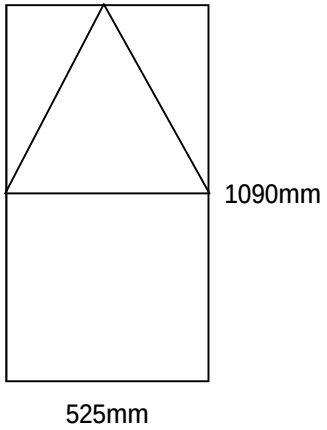


Kitchen Rear

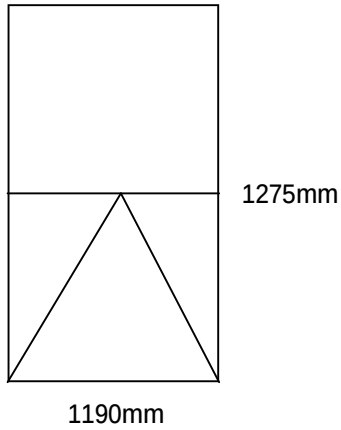


Hall

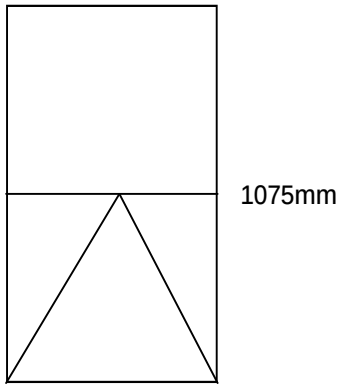


Bath

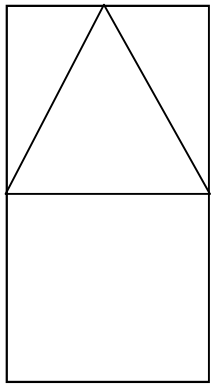


Bed

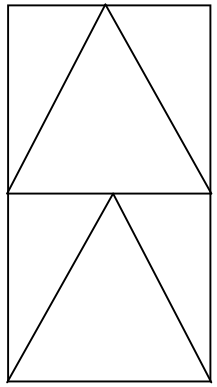


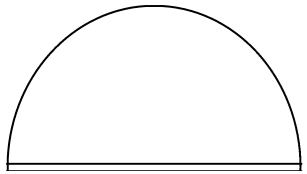

Lounge Arch